Project Name:

CC-633 / PAUL RIVERS

2324 W. BEST ROAD, BATH, PA 18014 (NORTHAMPTON COUNTY)

CLASSIFICATION	
FOUNDATION:	___BASEMENT
	_X_CRAWL
USE GROUP:	SINGLE FAMILY
CONSTRUCTION TYPE:	VB WOOD FRAMED UNPROTECTED
LOCATION:	NOT LESS THAN 60" TO PROPERTY LINE

DESIGN LOADS	
ROOF LOAD:	40 PSF GROUND SNOW LOAD
ROOF DEAD LOAD:	10 PSF
CEILING DEAD LOAD:	10 PSF
CEILING LIVE LOAD:	20 PSF (STORAGE)
FLOOR LIVE LOAD:	40 PSF
FLOOR DEAD LOAD:	10 PSF
WIND SPEED (V-ULT):	115 MPH (3 SEC GUST)
EXPOSURE:	C
SEISMIC CATEGORY:	B
SITE CLASS:	D

APPLICABLE CODES	
BUILDING CODE:	2015 IRC with PA IHA AMENDMENTS
ELECTRICAL CODE:	2014 NATIONAL ELECTRICAL CODE
ENERGY CODE:	2015 IECC ENERGY CONSERVATION CODE

DRAWING INDEX

SHEET#	DESCRIPTION	REV. DATE	LAYER CODE
0	COVER SHEET	.	.
1	FOUNDATION	.	FD
2	FLOOR PLAN	.	1Q
3	ELECTRICAL PLAN	.	1E
3A	ELECTRIC BASEBOARD HEAT PLAN	.	1H
4	FRONT & REAR ELEVATIONS	.	1EV
4A	LEFT & RIGHT SIDE ELEVATIONS	.	2EV
5	CROSS SECTION	.	1SE
5A	CROSS SECTION - BUMP OUT	.	2SE
5B	RIDGE BEAM DETAILS	.	6SE
6-9	RESERVED	.	.
10	WINDOW & DOOR SCHEDULE	.	.
11	BRACED WALL PLAN	.	1PR
11A	BRACED WALL DETAILS	.	.
12	PORCH CONNECTION DETAILS	.	.

ADDITIONAL PAGES	
1-11	ENERGY CHECK
1-6	TRUSS CERTIFICATION
1-22	STRUCTURAL CALCULATIONS
1	ELECTRICAL LOAD CALCULATION
1	WHOLE HOUSE VENTILATION CALCULATION

COZY CABINS LLC
455 FARMERSVILLE RD
NEW HOLLAND, PA 17557
PHONE: 717-354-3278
FAX: 717-354-0015
WWW.MYCOZYCABINS.COM

THESE DRAWINGS HAVE BEEN PREPARED BY **GLENCO, INC.**

THIS DOCUMENT AND THE SUBJECT MATTER CONTAINED HEREIN IS PROPRIETARY AND MAY NOT BE REPRODUCED WITHOUT WRITTEN PERMISSION
www.glencoinc.com

CUSTOMER/PROJECT:
PAUL RIVERS
2324 W. BEST ROAD
BATH, PA 18014

BUILDER:
COZY CABINS LLC
455 FARMERSVILLE ROAD
NEW HOLLAND, PA 17557

REV#	DATE	BY	REVISIONS

DRAWN BY: DAM
DATE: 12/17/19
SCALE: NTS
CHECKED BY: LDZ

FILE: CC-633
SQ.FT.: 1,632
STATE: PA
TYPE: RANCH
MODEL: FRONTIER
DRAWING: COVER SHEET
SHEET: 0

BUILDER: COZY CABINS LLC **S/N:** CC12190633

THIS HOUSE HAS BEEN EXTRACTED FROM THE APPROVED SYSTEMS PLAN ON FILE WITH THE STATE.

GENERAL NOTES

1. ALL WORK SHALL CONFORM TO THE CODES REFERENCED IN THE COVER SHEET AND MEET LOCAL ZONING REQUIREMENTS.
2. ALL WORK SHALL CONFORM TO THE DESIGN LOADS REFERENCED IN THE COVER SHEET.
3. ALL WORK IN THE FACTORY SHALL COMPLY WITH THE APPROVED DRAWINGS.
4. ALL SITE WORK SHALL COMPLY WITH ANY APPLICABLE MANUFACTURER APPROVED DRAWINGS OR LOCAL CODES AS REQUIRED.
5. SPECIFIED MATERIALS MAY BE SUBSTITUTED WITH MATERIALS THAT ARE EQUAL OR BETTER.
6. NO STRUCTURAL MEMBER SHALL BE CUT FOR PIPE'S, DUCTS, ETC, UNLESS SPECIFICALLY DETAILED IN THIS PACKAGE.
7. STRUCTURAL STEEL SHALL CONFORM TO THE LATEST SPECIFICATIONS OF THE ASTM AND HAVE A MIN. YIELD OF 36,000 PSI.
8. PLYWOOD SHALL BE GRADE STAMPED BY THE AMERICAN PLYWOOD ASSOCIATION OR EQUAL AND SHALL BE RATED SHEATHING.
9. STRUCTURAL USE LUMBER SHALL BE STAMPED AY AN APPROVED AGENCY AND SHALL CONFORM TO LATEST GRADING RULES FOR THE WESTERN LUMBER ASSOCIATION OR EQUAL
10. STRESS RATED BOARDS SHALL BE STAMPED ACCORDING TO GRADE SPECIES AND VALUE AND SHALL BE MARKED "SRB" 11 FINGER JOINTED
11. INTERIOR STAIRWAY REQUIREMENTS TO COMPLY WITH CODE REFERENCE

DISCLAIMER: These drawings have been prepared and reviewed in accordance with all applicable codes. This drawing set is not intended to be all inclusive, nor does this set detail every code required aspect of this building. The building contractor is responsible for compliance with all applicable codes under the supervision of the local authority having jurisdiction whether detailed in this set or not. Cozy Cabins LLC, its employees and affiliates assume no liability for errors and omissions from this set of drawings as may be permitted by law.

SEAL:

PFS CORPORATION
APPROVED
Plans Certified to comply with all Applicable codes and regulations of the
PA DCED Industrialized Housing Regulations
Signature: Michelle Floyd
Title: Staff Plan Reviewer
Date: **1/22/20**

Michelle Floyd

Digitally signed by Michelle Floyd
DN: cn=Michelle Floyd, o=PFS-TECO, ou, email=michelle.floyd@pfsteco.com, c=US
Date: 2020.01.22 15:57:23 -05'00'

NOTES:

1. ALL EXPOSED LUMBER TO BE OF NATURALLY DURABLE WOOD OR WOOD THAT IS PRESERVATIVE-TREATED IN ACCORDANCE WITH AWPA U1. PRESERVATIVES SHALL BE LISTED IN SECTION 4 OF AWPA U1.
2. ALL LUMBER THAT IS IN CONTACT WITH CONCRETE OR THE GROUND MUST BE APPROVED PRESSURE-PRESERVATIVE-TREATED WOOD SUITABLE FOR GROUND CONTACT USE.
3. ALL SUPPORT COLUMNS SHALL BE APPROVED WOOD OF NATURAL DECAY RESISTANCE OR APPROVED PRESSURE-PRESERVATIVE-TREATED WOOD.
4. ALL FIELD CUT ENDS, NOTCHES, DRILLED HOLES OF PRESERVATIVE-TREATED WOOD SHALL BE TREATED IN THE FIELD IN ACCORDANCE WITH AWPA M4.
5. ALL NAILS USED IN THE CONSTRUCTION OF PORCHES AND DECKS SHALL BE THREADED AND MEET THE REQUIREMENTS OF ASTM F 1667. THREADED NAILS AS STATED IN THIS DOCUMENT INCLUDE HELICAL (SPIRAL) AND ANNULAR (RINK SHANK) NAILS. WOOD SCREWS SHALL MEET THE REQUIREMENTS OF ANSI/ASME B18.6.1. BOLTS AND LAG SCREWS SHALL MEET THE REQUIREMENTS OF ANSI/ASME B18.2.1.
6. FLASHING SHALL BE CORROSION-RESISTANT METAL OF A MINIMUM NOMINAL THICKNESS OF 0.019 INCHES OR AN APPROVED NON-METALLIC MATERIAL.
   6.1. ALUMINUM SHOULD NOT BE USED IN DIRECT CONTACT WITH LUMBER TREATED WITH PRESERVATIVES THAT CONTAIN COPPER SUCH AS ACQ, COPPER AZOLE, OR ACZA.
7. ALL SCREWS, BOLTS, NAILS, NUTS AND WASHERS FOR USE WITH PRESERVATIVE TREATED WOOD SHALL BE HOT-DIPPED ZINC-COATED GALVANIZED STEEL, STAINLESS STEEL, SILICON BRONZE, OR COPPER. FASTENERS SHALL BE HOT DIPPED GALVANIZED AND SHALL MEET THE REQUIREMENTS OF ASTM A 153, CLASS D FOR FASTENERS 3/8" DIAMETER AND SMALLER, OR CLASS C FOR FASTENERS WITH DIAMETERS OVER 3/8".
8. FASTENERS OTHER THAN NAILS AND TIMBER RIVETS SHALL BE PERMITTED TO BE OF MECHANICALLY DEPOSITED ZINC-COATED STEEL WITH COATING WEIGHTS IN ACCORDANCE WITH ASTM B 695, CLASS 55, MINIMUM.
9. ALL HARDWARE (JOIST HANGERS, CAST-IN-PLACE POST ANCHORS, ETC.) THAT IS EXPOSED TO WEATHER OR IN CONTACT WTIH GROUND, CONCRETE OR PRESSURE TREATED LUMBER SHALL BE GALVANIZED OR SHALL BE STAINLESS STEEL. HARDWARE TO BE HOT DIPPED GALVANIZED PRIOR TO FABRICATION SHALL MEET ASTM A 653, G-185 COATING. HARDWARE TO BE HOT DIPPED GALVANIZED AFTER FABRICATION SHALL MEET ASTM A123.
10. FASTENERS AND CONNECTORS EXPOSED TO SALT WATER OR LOCATED WITHIN 300 FEET OF A SALT WATER SHORELINE SHALL BE STAINLESS STEEL GRADE 304 OR 316.
11. ALL OTHER COATED OR NON-FERROUS FASTENERS OR HARDWARE SHALL BE AS APPROVED BY THE AUTHORITY HAVING JURISDICTION.
12. HOT-DIPPED ZINC-COATED GALVANIZED STEEL CONNECTORS ARE REQUIRED AT ANY CONNECTIONS INTO CONCRETE
13. FASTENERS AND CONNECTORS INSTALLED IN TREATED LUMBER OTHER THAN MATERIAL WITH A CHEMICAL RETENTION GREATER THAN AWPA OR UC4A SHALL BE STAINLESS STEEL GRADE 304 OR 316.

FOUNDATION NOTES:

1. BUILDER TO LOCATE AND INSTALL BASEMENT WINDOWS OR VENT. 1/150 FLOOR AREA REQUIRED. VENTING MAY BE REDUCED TO 1/1500 FLOOR AREA WHEN A CLASS I VAPOR BARRIER IS INSTALLED. VENT OPENINGS SHALL BE LOCATED WITHIN 3' OR EACH CORNER TO PROVIDE CROSS VENTILATION.
2. CRAWL SPACE ACCESS IS TO BE THROUGH THE FOUNDATION WALL UNLESS OTHERWISE NOTED ON THE PLAN.
3. MIN. CRAWL ACCESS OPENING = 18"x24" (UNOBSTRUCTED)
4. ALL OPENINGS AND CONC. JOINTS TO BE COMPLETELY CAULKED.
5. R402.2 CONCRETE. ALL CONCRETE SHALL HAVE A MINIMUM SPECIFIED COMPRESSIVE STRENGTH AS SHOWN ON TABLE R402.2
6. ALL EXHAUST SYSTEMS TO TERMINATE TO EXTERIOR WITH BACK DRAFT BAFFLE

THIS FOUNDATION SHALL BE DESIGNED BY A LICENSED PROFESSIONAL WITH KNOWLEDGE OF LOCAL SOIL CONDITIONS. THIS FOUNDATION PLAN IS MEANT ONLY TO COMMUNICATE THE DIMENSIONAL AND LOADING INFORMATION TO THE DESIGN PROFESSIONAL SO THE FOUNDATION DESIGN IS COORDINATED WITH THE REQUIREMENTS OF THE MODULAR BUILDING. FOUNDATION WALLS, FOOTINGS, COLUMNS, PIERS, AND SLAB TO BE DESIGNED BY OTHERS TO MEET STATE AND/OR LOCAL CODES USING EXISTING SOIL ANALYSIS. MANUFACTURER ASSUMES NO RESPONSIBILITY FOR ERRORS IN THE CONSTRUCTION OF THE FOUNDATION. ANY AND ALL DIMENSIONS ARE TO BE CHECKED AND VERIFIED AGAINST THE FLOOR PLAN BY BUILDER/DEALER PRIOR TO FOUNDATION CONSTRUCTION. THE BUILDER/DEALER MUST CONTACT THE MANUFACTURER WITH ANY DISCREPANCIES PRIOR TO THE START OF CONSTRUCTION. MANUFACTURER WILL NOT ASSUME ANY RESPONSIBILITY IF BUILDER/DEALER/OWNER EXCEEDS MAXIMUM SPACING OF SUPPORTS AS SHOWN ON THIS DRAWING.

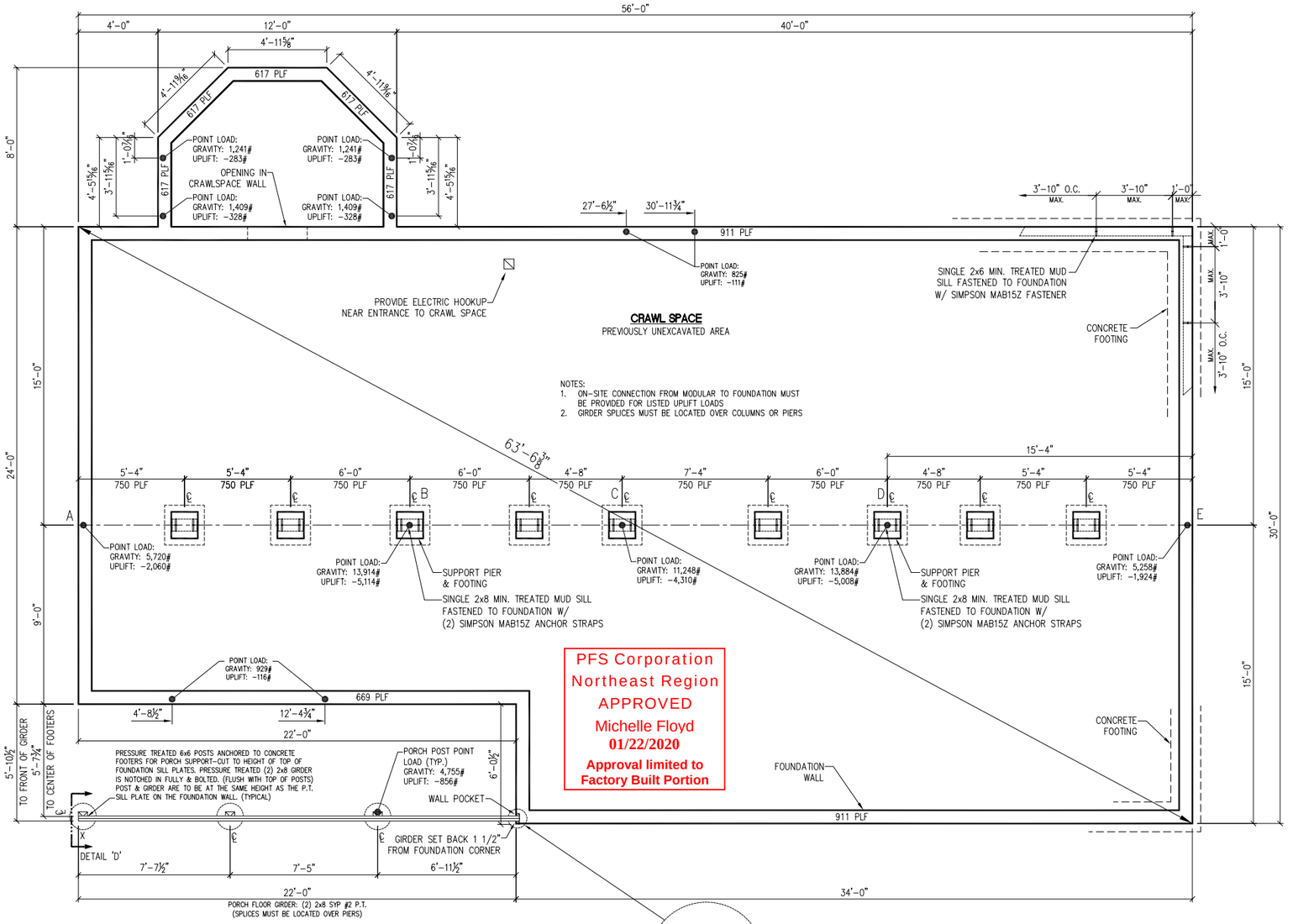

PFS Corporation
Northeast Region
APPROVED
Michelle Floyd
01/22/2020
Approval limited to Factory Built Portion

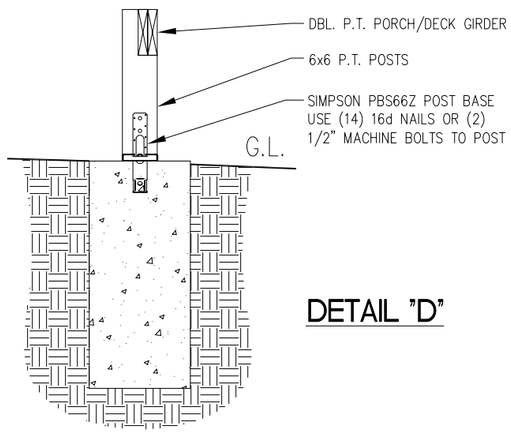

DETAIL "D"

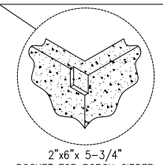

PA FOUNDATIONS MUST MEET THE FOLLOWING CRITERIA:

A-BE A TRUE FOOTPRINT OF THE BUILDING AND IS SPECIFIC TO THE SAID UNIT.
B-ALL LOADS HAVE SUPPORT COLUMNS FOR ALL OPENINGS GREATER THAN 4 FT. IF ONE IS MISSING, ONE MUST BE INSTALLED.
C-IF FILL IS MORE THAN 5 FT, USE 12" INCH BLOCK ON 20"x10" CONCRETE FOOTINGS
D-FOUNDATION DRAINAGE AND DAMP PROOFING TO CONFORM TO CODE
E-ALL ELECTRICAL AND MECHANICAL INSTRUCTIONS TO CONFORM TO CURRENT STATE & LOCAL CODE REQUIREMENTS
F-BASEMENT WALL OR BASEMENT CEILING INSULATION MAY BE SPELLED OUT ON FOUNDATION PRINTS TO COMPLETE COMPLIANCE TO ENERGY REQUIREMENTS PER 2015 IECC.
G-MINIMUM 6" FROM BOTTOM OF GRADE TO SIDING NEEDS TO BE PROVIDED AT SITE.
H-PURCHASER RESPONSIBLE FOR ALL SERVICE ENTRY CONNECTIONS AND ON-SITE TESTING AS REQUIRED BY LOCAL JURISDICTION
I-FOUNDATIONS PRINTS MAY NEED TO BE SEALED BY A PROFESSIONAL ENGINEER WHERE IT IS A REQUIREMENT OF THE LOCAL JURISDICTION.
J-BACK FILL AND TAMPING SHALL BE DONE PER THE LOCAL BUILDING OFFICIAL.

PA MODULAR EXEMPTION NOTES:

THE MANUFACTURER CERTIFIES THAT THE STRUCTURE (CC-633) IS NOT A MANUFACTURED HOME SUBJECT TO THE PROVISIONS OF THE NATIONAL MANUFACTURED HOUSING CONSTRUCTION AND SAFETY STANDARDS ACT AND IS:

(1) DESIGNATED ONLY FOR ERECTION OR INSTALLATION ON A SITE-BUILT PERMANENT FOUNDATION.
(2) NOT DESIGNED TO BE MOVED ONCE SO ERECTED OR INSTALLED.
(3) DESIGNED AND MANUFACTURED TO COMPLY WITH 2015 IRC.
(4) TO THE MANUFACTURER'S KNOWLEDGE THE STRUCTURE IS NOT INTENDED TO BE USED OTHER THAN ON A SITE-BUILT PERMANENT FOUNDATION.

COZY CABINS LLC
455 FARMERSVILLE RD
NEW HOLLAND, PA 17557
PHONE: 717-354-3278
FAX: 717-354-0015
WWW.MYCOZYCABINS.COM

THESE DRAWINGS HAVE BEEN PREPARED BY **GLENCO, INC.**

THIS DOCUMENT AND THE SUBJECT MATTER CONTAINED HEREIN IS PROPRIETARY AND MAY NOT BE REPRODUCED WITHOUT WRITTEN PERMISSION
www.glencoinc.com

CUSTOMER/PROJECT: PAUL RIVERS, 2324 W. BEST ROAD, BATH, PA 18014
BUILDER: COZY CABINS LLC, 455 FARMERSVILLE ROAD, NEW HOLLAND, PA 17557

REV#	DATE	REVISIONS	BY

DRAWN BY: DAM
DATE: 12/17/19
SCALE: 5/32"=1'-0"
CHECKED BY: LDZ

FILE: CC-633
SQ.FT.: 1,632
STATE: PA
TYPE: RANCH
MODEL: FRONTIER
DRAWING: FOUNDATION
SHEET: 1

** 2x10 SPF#2 1ST STORY FLOOR JOISTS @ 16" O.C.
** 2x6 EXTERIOR WALLS @ 16" O.C.
** 8/12 ENGINEERED TRUSS ROOF SYSTEM @ 24" O.C.
** (3) 2x6 SPF#2 HEADERS OVER EXT BEARING WALL OPENINGS (UNLESS INDICATED OTHERWISE)
** WATER HEATER TO BE SUPPLIED AND INSTALLED ON-SITE BY OTHERS

Kitchen / Dining / Living Room - ARTIFICIAL LIGHT CALCULATION		
Foot Candle Calculator (min. required per room is 6.0 FC per sq. ft. at 30" a.f.f.), IRC Section R303.1		
15.5	Room sq. ft. not covered by natural light (8% of room sq. ft.)	
3	Total Lamps per Fixture	
1	Total Fixtures per Room	
15	Watts per Bulb	
720	Lumens per Bulb (see chart at right)	
0.67	CU=Coefficient of Utilization (% of light reaching task area)	
0.7	LLF=Light Loss Factor (time dependent depreciation factor)	
65.36	Average FC's per Fixture: (Lumens x Lamps x CU x LLF)/Room Sq. Ft.	
65.36	Average FC's per sq. ft.: Total Fixtures per Room x Average FC per Fixture (min. 6 FC req'd)	
93.00	Required FC's per Room sq. ft. not covered by natural light (Room Sq. Ft. x FC req'd	
1013.04	Provided FC's per Room sq. ft. not covered by natural light (Room Sq. Ft. x Avg. FC's)	
	Illumination Calculations derived from Ramsey/Sleeper Arch. Graphic Standards, 9th Ed.	

2018 IRC, TABLE R602.7.5
MINIMUM NUMBER OF FULL HEIGHT STUDS
AT EACH END OF HEADERS IN EXTERIOR WALLS

MAXIMUM HEADER SPAN (FEET)	ULTIMATE DESIGN WND SPEED AND EXPOSURE CATEGORY	
	<140 MPH, EXPOSURE B OR <130 MPH, EXPOSURE C	≤115 MPH, EXPOSURE B
4	1	1
6	2	1
8	2	1
10	3	2
12	3	2
14	3	2
16	4	2
18	4	2

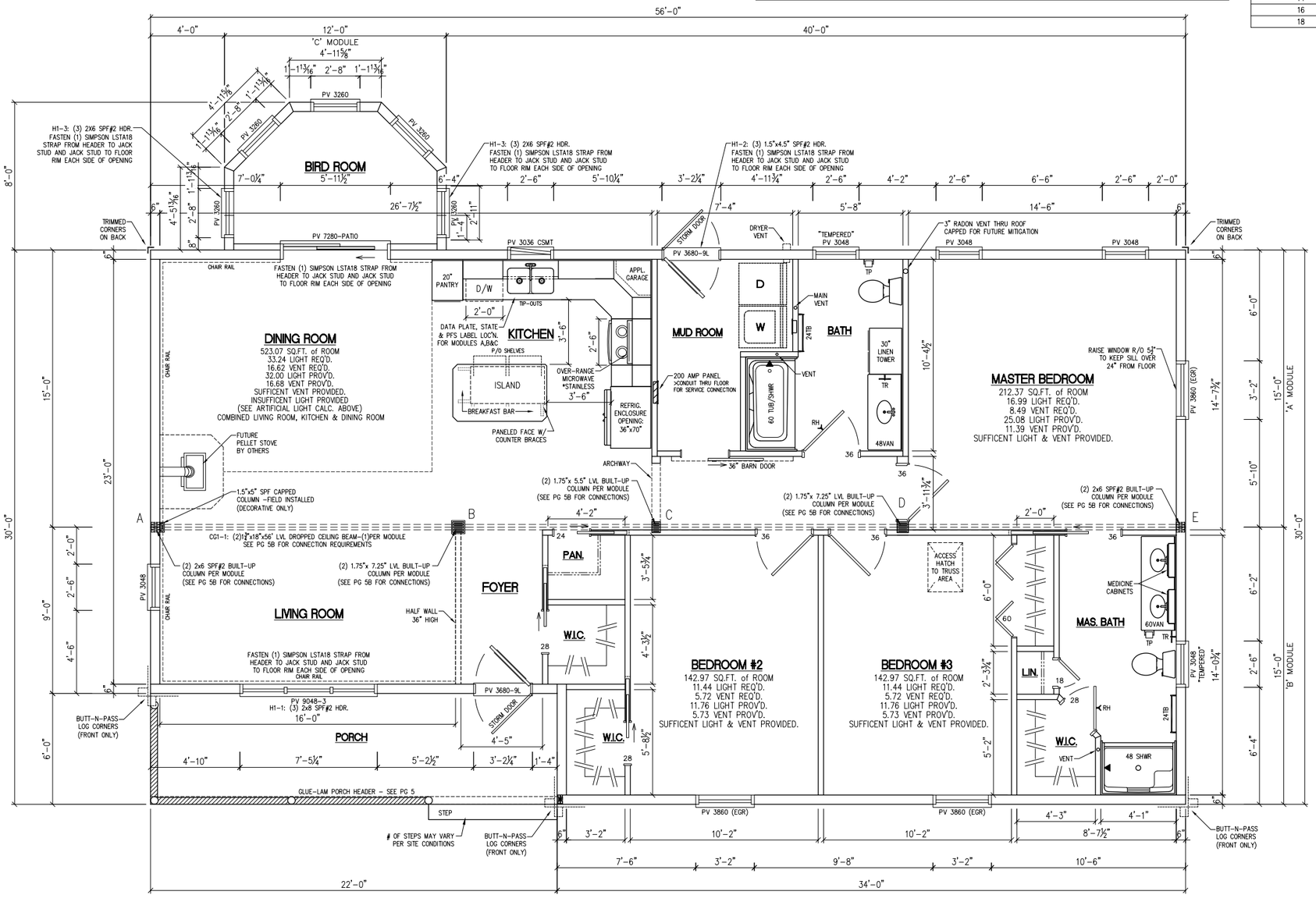

PFS Corporation
Northeast Region
APPROVED
Michelle Floyd
01/22/2020
Approval limited to Factory Built Portion

THIS HOUSE HAS BEEN EXTRACTED FROM THE APPROVED SYSTEMS PLAN ON FILE WITH THE STATE.

ALL WINDOW OPENINGS WHICH ARE 72" ABOVE FINISHED GRADE, WITH THE BOTTOM OF THE CLEAR OPENING LESS THAN 24" ABOVE FINISHED FLOOR, SHALL BE PROVIDED WITH FIELD SUPPLIED AND INSTALLED WINDOW GUARDS PER 15 IRC R312.2

COZY CABINS LLC
455 FARMERSVILLE RD
NEW HOLLAND, PA 17557
PHONE: 717-354-3278
FAX: 717-354-0015
WWW.MYCOZYCABINS.COM

THESE DRAWINGS HAVE BEEN PREPARED BY **GLENCO, INC.**

THIS DOCUMENT AND THE SUBJECT MATTER CONTAINED HEREIN IS PROPRIETARY AND MAY NOT BE REPRODUCED WITHOUT WRITTEN PERMISSION
www.glencoinc.com

CUSTOMER/PROJECT: PAUL RIVERS, 2324 W. BEST ROAD, BATH, PA 18014
BUILDER: COZY CABINS LLC, 455 FARMERSVILLE ROAD, NEW HOLLAND, PA 17557

REV#	DATE	REVISIONS	BY

DRAWN BY: DAM | DATE: 12/17/19 | SCALE: 5/32"=1'-0" | CHECKED BY: LDZ

FILE: CC-633
SQ.FT.: 1,632
STATE: PA
TYPE: RANCH
MODEL: FRONTIER
DRAWING: FLOOR PLAN
SHEET: 2

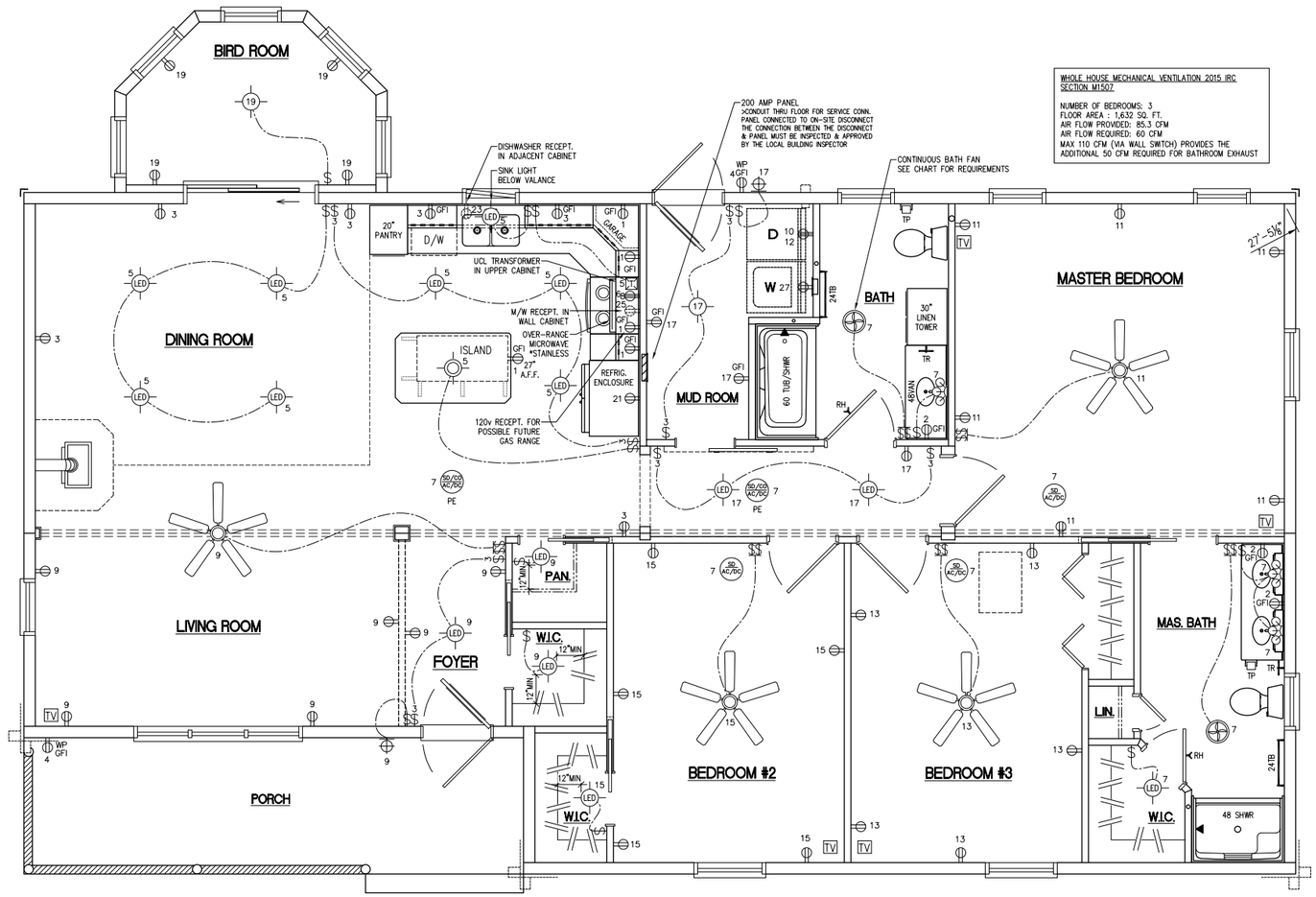

WHOLE HOUSE MECHANICAL VENTILATION 2015 IRC SECTION M1507

NUMBER OF BEDROOMS: 3
FLOOR AREA : 1,632 SQ. FT.
AIR FLOW PROVIDED: 85.3 CFM
AIR FLOW REQUIRED: 60 CFM
MAX 110 CFM (VIA WALL SWITCH) PROVIDES THE ADDITIONAL 50 CFM REQUIRED FOR BATHROOM EXHAUST

PFS Corporation
Northeast Region
APPROVED
Michelle Floyd
01/22/2020
Approval limited to Factory Built Portion

ELECTRIC SYMBOLS

- SINGLE RECEPTACLE
- DUPLEX RECEPTACLE
- WATERPROOF RECEP. w/GFI
- GROUND-FAULT INTER.
- 220 VOLT RECEPTACLE
- TOP HOT & BOT. SWITCHED
- SINGLE POLE SWITCH
- THREE WAY SWITCH
- CEILING LIGHT
- THIN LED CEILING LIGHT
- MINI PENDANT LIGHT
- CATHEDRAL PENDANT LIGHT
- RECESSED LIGHT
- EXHAUST FAN/LIGHT
- INT. OR EXT. WALL LIGHT
- CEILING FAN / LIGHT
- FLUORESCENT LIGHT
- RANGE EXHAUST HOOD
- SMOKE DETECTOR
- CO/SMOKE DETECTOR
- JUNCTION BOX
- AMP CONNECTS
- SPECIAL APPLIANCE
- FLOOD LIGHT
- THERMOSTAT
- PHONE JACK
- TV JACK
- VANITY LIGHT
- PULL-CHAIN WALL LIGHT

2014 NEC ELECTRICAL NOTES:

1. AN ARC-FAULT BREAKER IS REQUIRED FOR ALL 15 AND 20 AMP CIRCUITS SUPPLYING OUTLETS INSTALLED IN THE DWELLING UNIT EXCEPT THOSE IN BATHROOMS, UNFINISHED BASEMENTS, GARAGES, OUTDOORS, OR OTHER SIMILAR AREAS. (NEC 210.12B)
2. A GFCI BREAKER OR RECEPTACLE IS REQUIRED (BUT NOT LIMITED TO) ALL CIRCUITS SERVING KITCHEN COUNTERTOP RECEPTACLES, BATHROOMS, LAUNDRIES, AND DISHWASHERS. (NEC 210.8)
3. A GFCI BREAKER OR RECEPTACLE IS REQUIRED (BUT NOT LIMITED TO) ALL CIRCUITS WITHIN 6' OF ANY SINK (NEC 210.8)
4. AN EXTERIOR WEATHER PROOF RECEPTACLE IS REQUIRED TO BE LOCATED AT BOTH THE FRONT & REAR (AT GRADE LEVEL) OF ALL DWELLING UNITS. (NEC 210.52) AN EXTERIOR WEATHER PROOF RECEPTACLE IS REQUIRED TO BE LOCATED AT ALL PORCHES, STOOPS, PATIOS, AND DECKS AND SHALL BE ACCESSIBLE FROM GRADE LEVEL.
5. ALL RECEPTACLES IN DWELLING UNITS ARE TO BE TAMPER RESISTANT.
6. INTERIOR LOCATION OF ELECTRICAL PANEL REQUIRES A DISCONNECT INSTALLED AT THE POINT OF ENTRANCE NEAREST THE SERVICE CONDUCTORS.
7. A NEUTRAL CONDUCTOR SHALL BE PROVIDED IN EVERY SWITCH BOX
8. ALL LIGHTING CEILING OUTLETS MUST BE RATED FOR 50#
9. WATER HEATER ON-SITE BY OTHERS

200 AMP CIRCUIT SCHEDULE

*WIRE WITH GROUND ALL CIRCUITS

CRT	TYP	BRK	WIRE	LOCATION	VOLT	CRT	TYP	BRK	WIRE	LOCATION	VOLT
1	AFI	20A	12-2	APPL.-KITCHEN	120	2	-	20A	12-2	BATH RECPT.	120
3	AFI	20A	12-2	APPL.-KIT/DIN	120	4	-	20A	12-2	EXTERIOR RECPT.	120
5	AFI	15A	14-2	GENERAL LIGHTS	120	6	-	40A	8-3	ELECTRIC RANGE	240
7	AFI	15A	14-2	LIGHTS & SD	120	8					
9	AFI	15A	14-2	LIVING ROOM	120	10	-	30A	10-3	ELECTRIC DRYER	240
11	AFI	15A	14-2	MASTER BEDROOM	120	12					
13	AFI	15A	14-2	BEDROOM #3	120	14	-	20A	12-2	LIVING ROOM BASEBOARD HEAT	240
15	AFI	15A	14-2	BEDROOM #2	120	16					
17	AFI	15A	14-2	MUD RM/HALL	120	18	-	20A	12-2	BDRM2&3/MSTR.BATH BASEBOARD HEAT	240
19	AFI	15A	14-2	BIRD ROOM	120	20					
21	AFI	20A	12-2	REFRIGERATOR	120	22	-	20A	12-2	MAS.BEDRM/MAIN BATH BASEBOARD HEAT	240
23	AFI/GFI	20A	12-2	DISHWASHER	120	24					
25	AFI/GFI	20A	12-2	MICROWAVE	120	26	-	20A	12-2	KIT/DINING/BIRD RM BASEBOARD HEAT	240
27	AFI/GFI	20A	12-2	WASHER	120	28					
29						30					
31						32					
33						34					
35						36					
37						38					
39						40					

COZY CABINS LLC
455 FARMERSVILLE RD
NEW HOLLAND, PA 17557
PHONE: 717-354-3278
FAX: 717-354-0015
WWW.MYCOZYCABINS.COM

THESE DRAWINGS HAVE BEEN PREPARED BY **GLENCO, INC.**

THIS DOCUMENT AND THE SUBJECT MATTER CONTAINED HEREIN IS PROPRIETARY AND MAY NOT BE REPRODUCED WITHOUT WRITTEN PERMISSION
www.glencoinc.com

CUSTOMER/PROJECT: PAUL RIVERS, 2324 W. BEST ROAD, BATH, PA 18014
BUILDER: COZY CABINS LLC, 455 FARMERSVILLE ROAD, NEW HOLLAND, PA 17557

REV#	DATE	REVISIONS	BY

DRAWN BY: DAM
DATE: 12/17/19
SCALE: 5/32"=1'-0"
CHECKED BY: LDZ

FILE: CC-633
SQ.FT.: 1,632
STATE: PA
TYPE: RANCH
MODEL: FRONTIER
DRAWING: ELECTRICAL PLAN
SHEET: 3

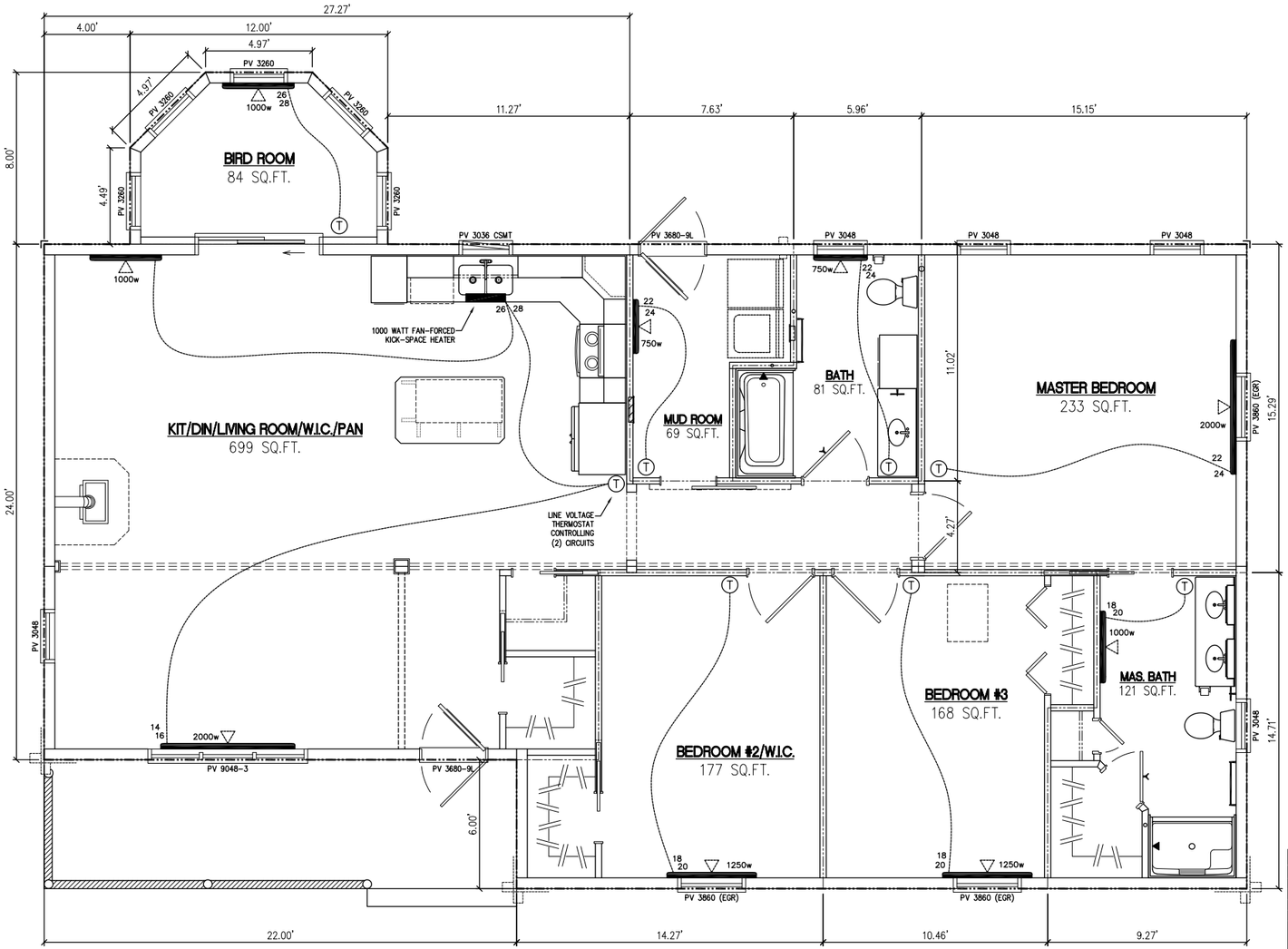

HEATING SYSTEM NOTES:

- ELECTRIC BASEBOARD HEAT (FACTORY INSTALLED)
- DIMPLEX LCM SERIES HEATERS
- TOTAL BTU HEAT LOSS = 32,387

PFS Corporation
Northeast Region
APPROVED
Michelle Floyd
01/22/2020
Approval limited to Factory Built Portion

Customer / File Name:	Paul Rivers / CC-633															
Room Name:	Kit/Din/Living Rm		Bath		Master Bedroom		Master Bath		Bedroom #2		Bedroom #3		Mud Room		Brd Room	
Length (feet in decimal)	29.13		7.35		15.15		8.23		12.03		10.46		6.26		12.00	
Width	24.00		11.02		15.29		14.71		14.71		16.06		11.02		8.00	
Exterior Wall length	61.21		5.99		30.44		22.98		20.27		10.46		7.63		24.00	
Ceiling Height	8.10		8.13		8.10		8.10		8.10		8.10		8.10		8.00	
	Area	Loss (UxA)	Area	Loss (UxA)	Area	Loss (UxA)	Area	Loss (UxA)	Area	Loss (UxA)	Area	Loss (UxA)	Area	Loss (UxA)	Area	Loss (UxA)
Windows (U value)																
0.26	39.75	10.3	10.00	2.6	35.83	9.3	10.00	2.6	15.83	4.1	15.83	4.1	0.0	0.0	66.70	17.3
0.22	7.50	1.7		0.0		0.0		0.0		0.0		0.0	0.0	0.0		0.0
0.28		0.0		0.0		0.0		0.0		0.0		0.0	0.0	0.0		0.0
Doors (U value)																
0.14		0.0		0.0		0.0		0.0		0.0		0.0	0.0	0.0		0.0
0.19	21.96	4.2		0.0		0.0		0.0		0.0		0.0	21.90	4.2		0.0
0.23		0.0		0.0		0.0		0.0		0.0		0.0	0.0	0.0		0.0
ExtWalls (U value)																
0.048	427.37	20.5	38.276	1.8	219.734	10.5	164.238	7.8	148.357	7.1	68.896	3.3	39.903	1.9	125.3	6.0
0	0	0.0	0	0.0	0	0.0	0	0.0	0	0.0	0	0.0	0	0.0	0	0.0
Floors (U value)																
0.034	699	23.8	81	2.8	231.8435	7.9	121	4.1	177	6.0	164	5.7	69	2.3	96	3.3
0	0	0.0	0	0.0	0	0.0	0	0.0	0	0.0	0	0.0	0	0.0	0	0.0
Ceiling (U value)																
0.027	699	18.9	81	2.2	231.8435	6.3	121	3.3	177	4.8	164	4.5	69	1.9	96	2.6
0	0	0.0	0	0.0	0	0.0	0	0.0	0	0.0	0	0.0	0	0.0	0	0.0
Infiltration	Volume		Volume		Volume		Volume		Volume		Volume		Volume		Volume	
0.016	5661.9	91	696.1	11	1876.312	30	980.1	16	1433.7	23	1360.4	22	558.9	9	768	12
Total (U x A)		170		29		64		35		45		39		19		42
Design Temp	68															
Heat Loss (UxAxT)	BTU Required	12,707	BTU Required	1,487	BTU Required	4,756	BTU Required	2,581	BTU Required	3,364	BTU Required	2,950	BTU Required	1,438	BTU Required	3,104
	Qty	Model	Qty	Model	Qty	Model	Qty	Model	Qty	Model	Qty	Model	Qty	Model	Qty	Model
Electric Baseboard *Dimplex LCM Series*	1	TKH1000	1	750	1	2000	1	1000	1	1250	1	1250	1	750	1	1000
	1	2000														
	1	1000														
BTL provided applies to Dimplex Series electric baseboard only	BTU Provided	13,649	BTU Provided	2,559	BTU Provided	6,824	BTU Provided	3,412	BTU Provided	4,265	BTU Provided	4,265	BTU Provided	2,559	BTU Provided	3,412
Total BTU Loss	Dimplex LCM Series															
32,387	**Model**	**500**	**750**	**1000**	**1250**	**1500**	**2000**	**2500**	**TKH1000**	**TKH2000**						
	Watts	500	750	1000	1250	1500	2000	2500	1000	2000						
	BTU	1706	2559	3412	4265	5118	6824	8530	3412	6824						

COZY CABINS LLC
455 FARMERSVILLE RD
NEW HOLLAND, PA 17557
PHONE: 717-354-3278
FAX: 717-354-0015
WWW.MYCOZYCABINS.COM

THESE DRAWINGS HAVE BEEN PREPARED BY **GLENCO, INC.**

THIS DOCUMENT AND THE SUBJECT MATTER CONTAINED HEREIN IS PROPRIETARY AND MAY NOT BE REPRODUCED WITHOUT WRITTEN PERMISSION
www.glencoinc.com

CUSTOMER/PROJECT: PAUL RIVERS, 2324 W. BEST ROAD, BATH, PA 18014
BUILDER: COZY CABINS LLC, 455 FARMERSVILLE ROAD, NEW HOLLAND, PA 17557

REV#	DATE	REVISIONS	BY

DRAWN BY: DAM
DATE: 12/17/19
SCALE: 5/32"=1'-0"
CHECKED BY: LDZ

FILE: CC-633
SQ.FT.: 1,632
STATE: PA
TYPE: RANCH
MODEL: FRONTIER
DRAWING: ELECTRIC BASEBOARD HEAT
SHEET: 3A

FRONT ELEVATION

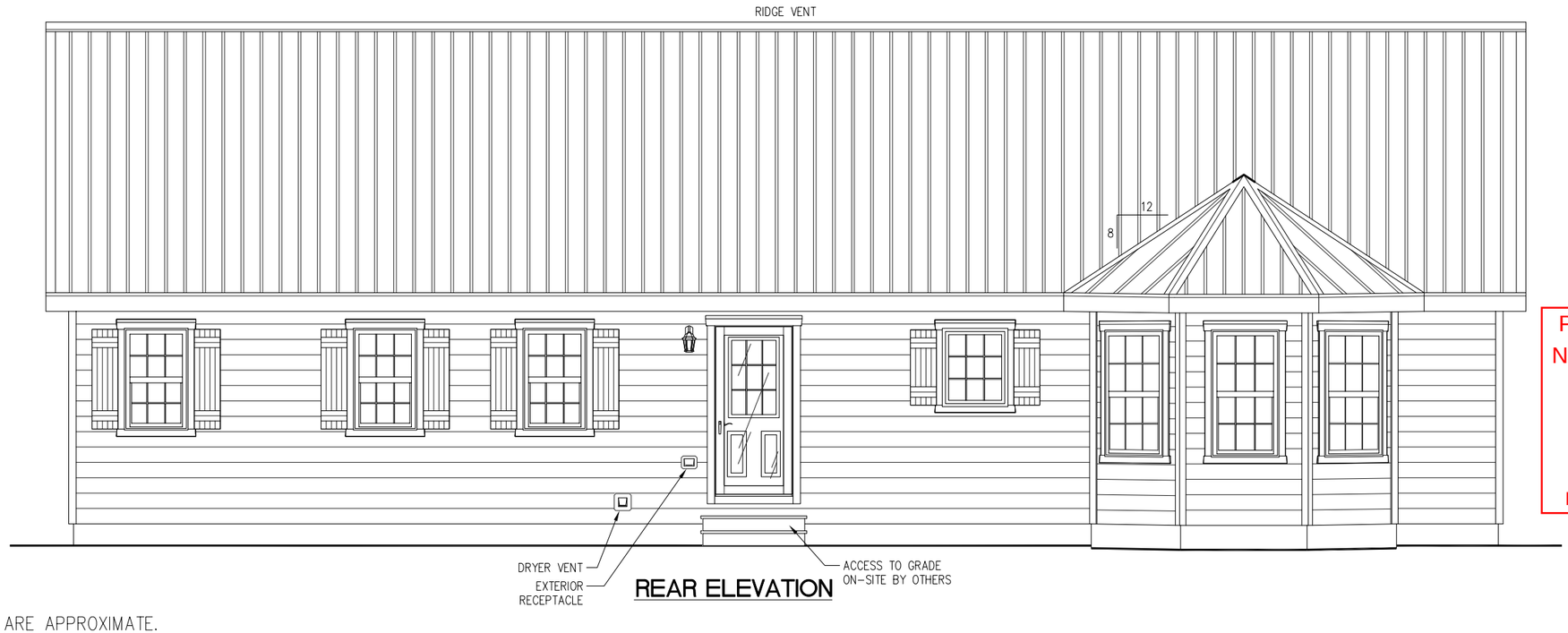

REAR ELEVATION

NOTES:

1. ELEVATION DRAWINGS ARE APPROXIMATE.
2. CORROSION RESISTANT FLASHING AT TOP AND SIDE OF DOORS, WINDOWS, AND AT ROOF PENETRATIONS.
3. GUTTERS, LEADERS, AND SPLASH BLOCKS FURNISHED AND INSTALLED BY OTHERS ON SITE.

PFS Corporation
Northeast Region
APPROVED
Michelle Floyd
01/22/2020
Approval limited to Factory Built Portion

COZY CABINS LLC
455 FARMERSVILLE RD
NEW HOLLAND, PA 17557
PHONE: 717-354-3278
FAX: 717-354-0015
WWW.MYCOZYCABINS.COM

THESE DRAWINGS HAVE BEEN PREPARED BY
GLENCO, INC.

THIS DOCUMENT AND THE SUBJECT MATTER CONTAINED HEREIN IS PROPRIETARY AND MAY NOT BE REPRODUCED WITHOUT WRITTEN PERMISSION
www.glencoinc.com

CUSTOMER/PROJECT:
PAUL RIVERS
2324 W. REST ROAD
BATH, PA 18014

BUILDER:
COZY CABINS LLC
455 FARMERSVILLE ROAD
NEW HOLLAND, PA 17557

REV#	DATE	BY	REVISIONS

DRAWN BY: DAM
DATE: 12/17/19
SCALE: 3/16"=1'-0"
CHECKED BY: LDZ

FILE: CC-633
SQ.FT.: 1,632
STATE: PA
TYPE: RANCH
MODEL: FRONTIER
DRAWING: FRONT & REAR ELEVATIONS
SHEET: 4

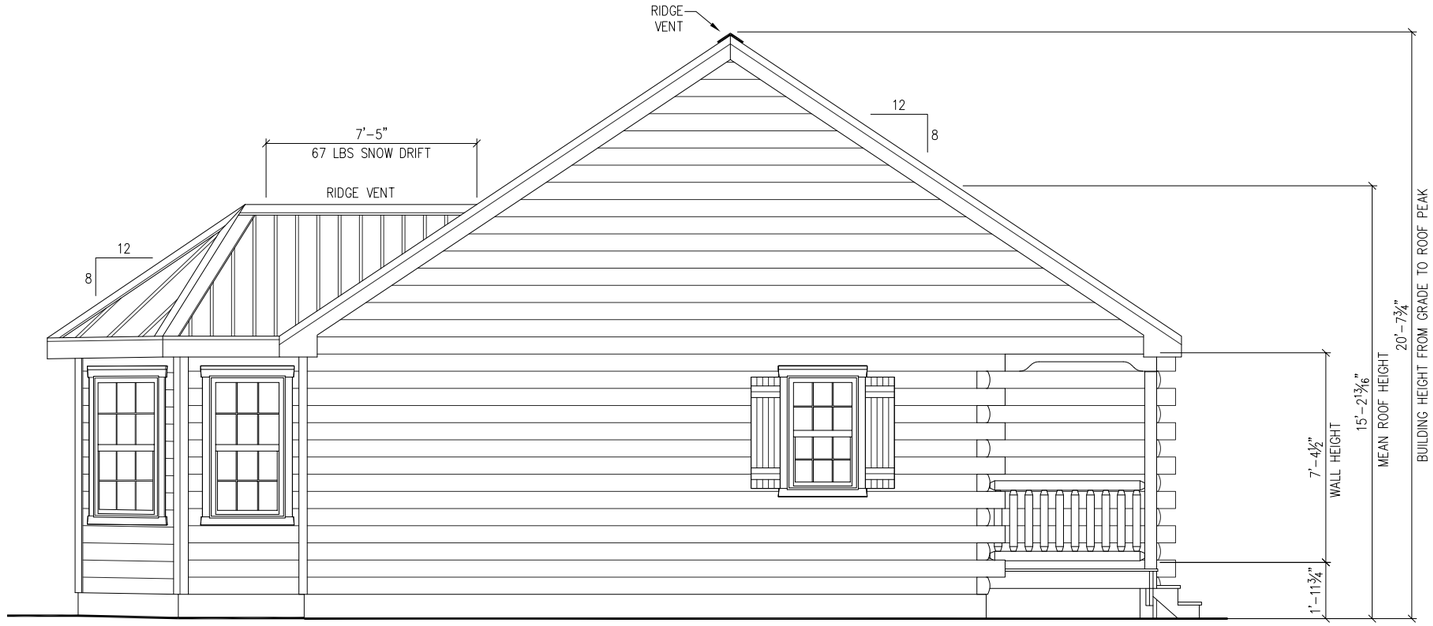

LEFT SIDE ELEVATION

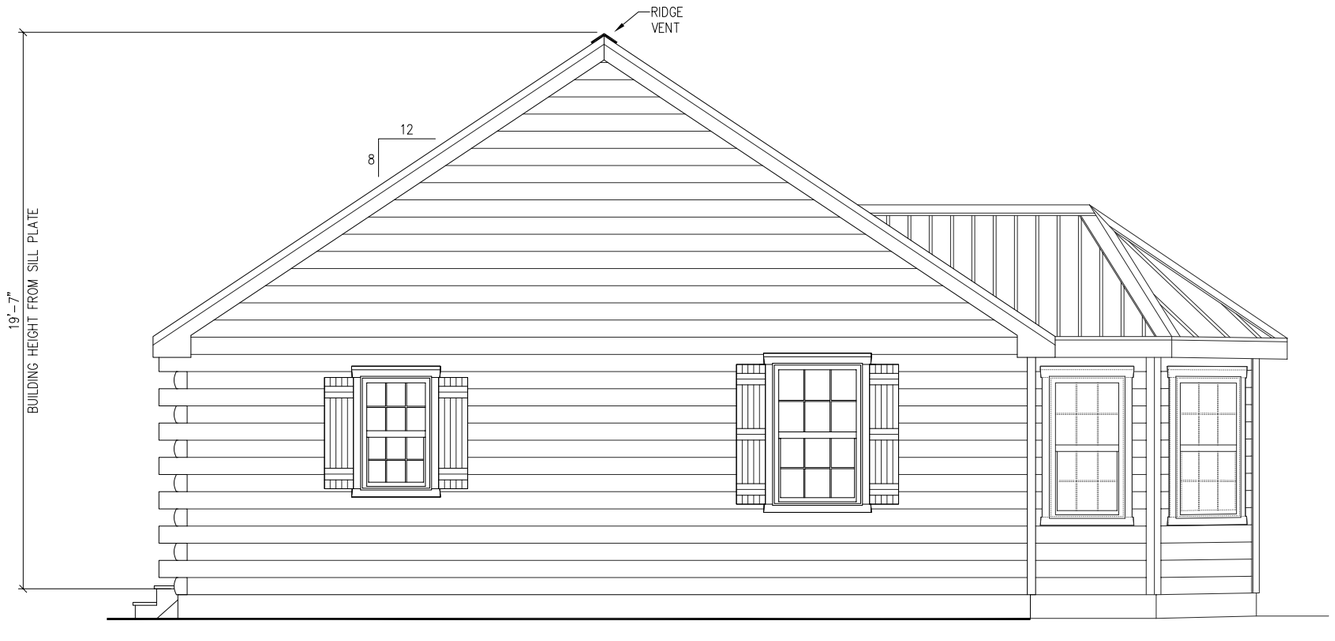

RIGHT SIDE ELEVATION

NOTES:

1. ELEVATION DRAWINGS ARE APPROXIMATE.
2. CORROSION RESISTANT FLASHING AT TOP AND SIDE OF DOORS, WINDOWS, AND AT ROOF PENETRATIONS.
3. GUTTERS, LEADERS, AND SPLASH BLOCKS FURNISHED AND INSTALLED BY OTHERS ON SITE.

PFS Corporation
Northeast Region
APPROVED
Michelle Floyd
01/22/2020
Approval limited to Factory Built Portion

COZY CABINS LLC
455 FARMERSVILLE RD
NEW HOLLAND, PA 17557
PHONE: 717-354-3278
FAX: 717-354-0015
WWW.MYCOZYCABINS.COM

THESE DRAWINGS HAVE BEEN PREPARED BY **GLENCO, INC.**

THIS DOCUMENT AND THE SUBJECT MATTER CONTAINED HEREIN IS PROPRIETARY AND MAY NOT BE REPRODUCED WITHOUT WRITTEN PERMISSION
www.glencoinc.com

CUSTOMER/PROJECT:
PAUL RIVERS
2324 W. REST ROAD
BATH, PA 18014

BUILDER:
COZY CABINS LLC
455 FARMERSVILLE ROAD
NEW HOLLAND, PA 17557

REV#	DATE	BY	REVISIONS

DRAWN BY: DAM
DATE: 12/17/19
SCALE: 3/16"=1'-0"
CHECKED BY: LDZ

FILE: CC-633
SQ.FT.: 1,632
STATE: PA
TYPE: RANCH
MODEL: FRONTIER
DRAWING: SIDE ELEVATIONS
SHEET: 4A

ON-SITE TRUSS CONNECTIONS

JOINT 6:
-(2) .131"x3" NAILS THRU RAIL INTO TRUSS CHORD END GRAIN
-(2) .131"x3" TOENAILS FROM RAIL TO RAIL EACH TRUSS
-ROOF SHEATHING LAP OVER JOINT w/ (3) 7/16" x2" x16 GA STAPLES EACH SIDE OF JOINT INTO EACH FRAMING MEMBER

JOINT 7:
-(2) .131"x3" NAILS THRU RAIL INTO TRUSS CHORD END GRAIN
-(2) .131"x3" TOENAILS FROM RAIL TO RAIL EACH TRUSS

JOINT 12:
-(1) SIMPSON LSTA18 MOUNTED DIAGONALLY FROM KNEEWALL TO KING POST WITH MIN. (4) 10d x1.5" NAILS EACH END INTO FRAMING MEMBER
-(2) .131"x3" TOENAILS THRU KNEEWALL STUD INTO RAIL
-(2) .131"x3" TOENAILS FROM RAIL INTO KING POST ENDGRAIN

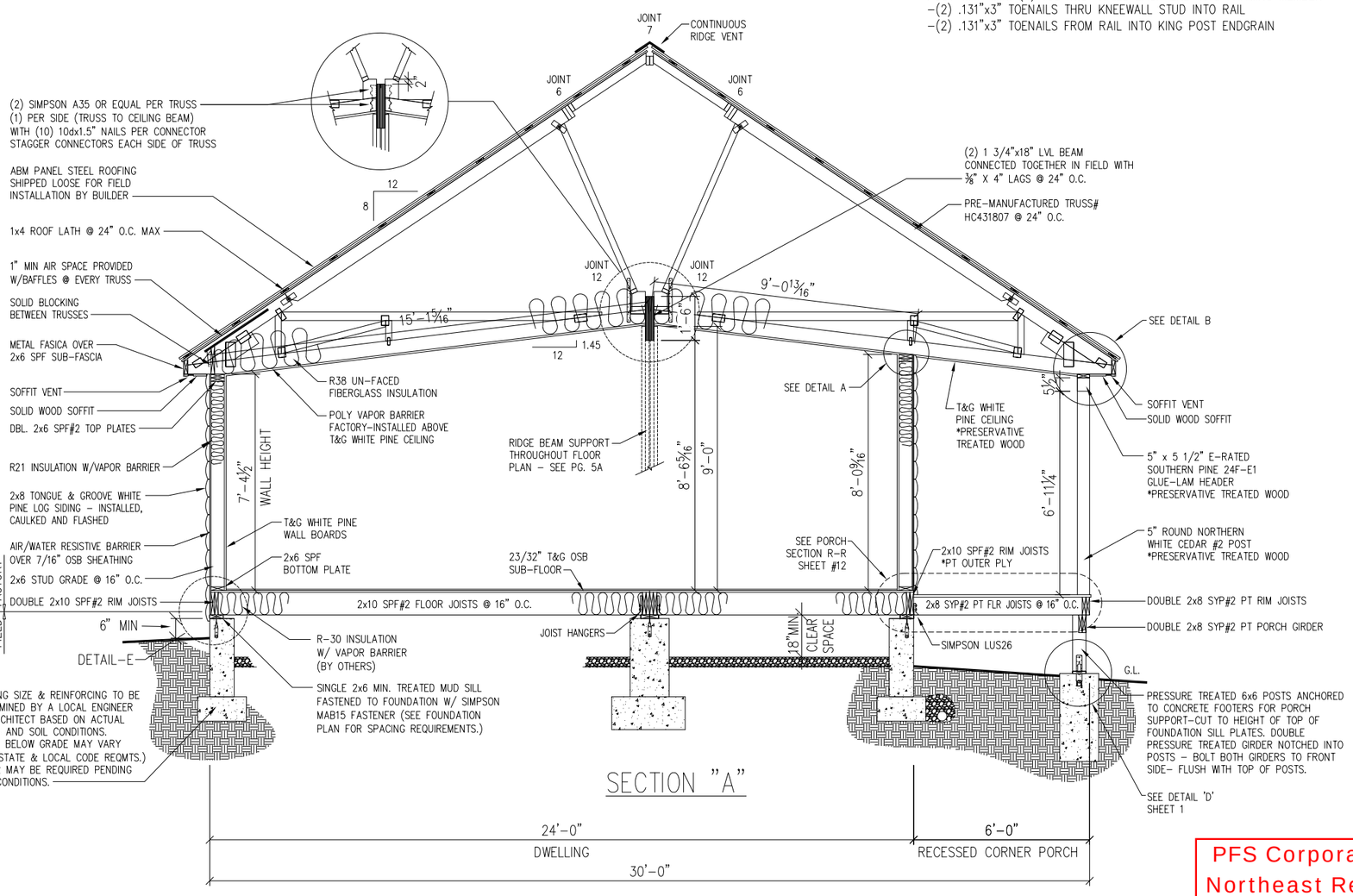

SECTION "A"

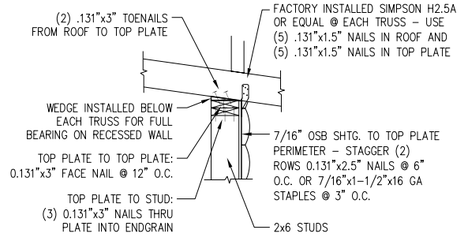

DETAIL "A"

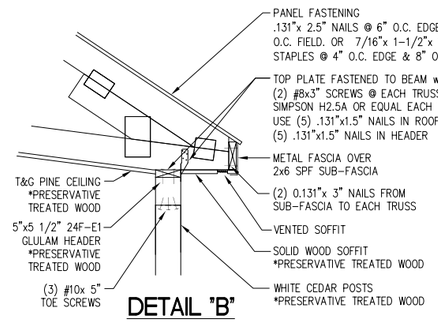

DETAIL "B"

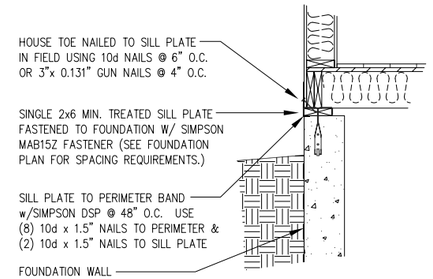

DETAIL "E"

HOUSE TO FOUNDATION CONNECTIONS

NOTES:
1. ALL EXPOSED LUMBER TO BE PRESSURE TREATED OR PRESERVATIVE TREATED
2. ALL EXPOSED CONNECTORS MUST BE CORROSIONS RESISTANT

PFS Corporation
Northeast Region
APPROVED
Michelle Floyd
01/22/2020
Approval limited to Factory Built Portion

COZY CABINS LLC
455 FARMERSVILLE RD
NEW HOLLAND, PA 17557
PHONE: 717-354-3278
FAX: 717-354-0015
WWW.MYCOZYCABINS.COM

THESE DRAWINGS HAVE BEEN PREPARED BY **GLENCO, INC.**

THIS DOCUMENT AND THE SUBJECT MATTER CONTAINED HEREIN IS PROPRIETARY AND MAY NOT BE REPRODUCED WITHOUT WRITTEN PERMISSION
www.glencoinc.com

CUSTOMER/PROJECT:
PAUL RIVERS
2324 W. BEST ROAD
BATH, PA 18014

BUILDER:
COZY CABINS LLC
455 FARMERSVILLE ROAD
NEW HOLLAND, PA 17557

REV#	DATE	REVISIONS	BY

DRAWN BY: DAM
DATE: 12/17/19
SCALE: 3/16"=1'-0"
CHECKED BY: LDZ

FILE: CC-633
SQ.FT.: 1,632
STATE: PA
TYPE: RANCH
MODEL: FRONTIER
DRAWING: CROSS SECTION
SHEET: 5

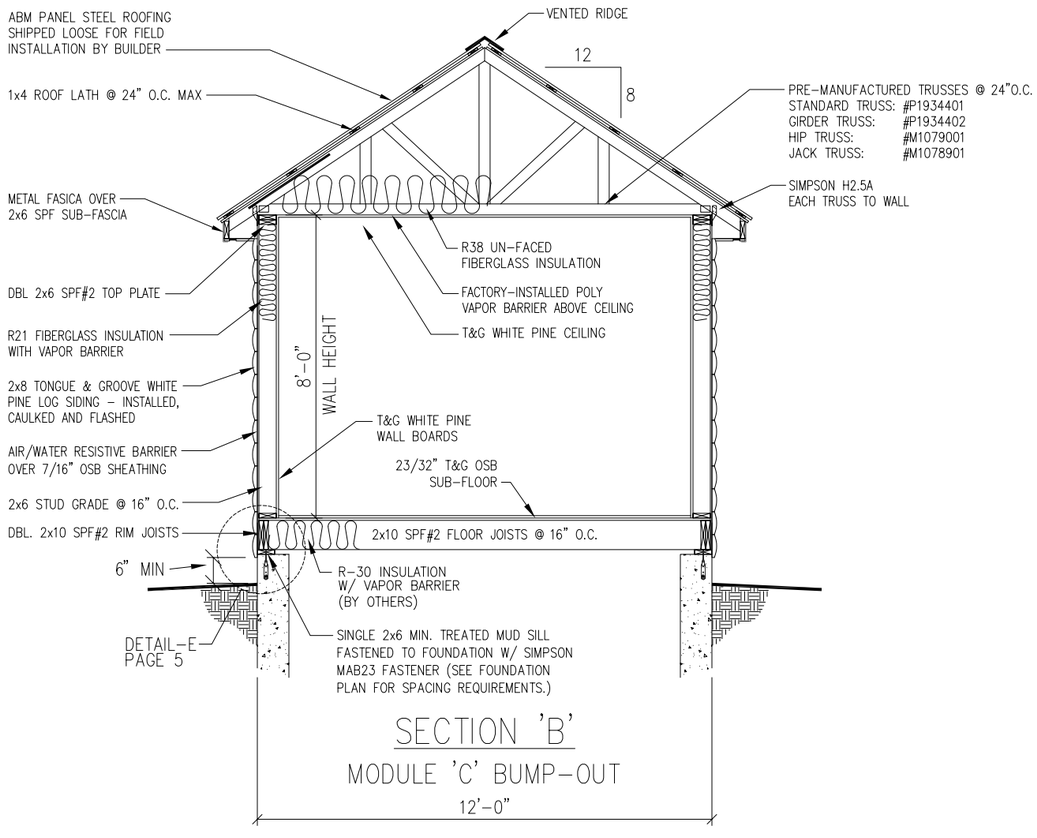

SECTION 'B'

MODULE 'C' BUMP-OUT

NOTES:

1. ALL EXPOSED LUMBER TO BE PRESSURE TREATED OR PRESERVATIVE TREATED
2. ALL EXPOSED CONNECTORS MUST BE CORROSIONS RESISTANT

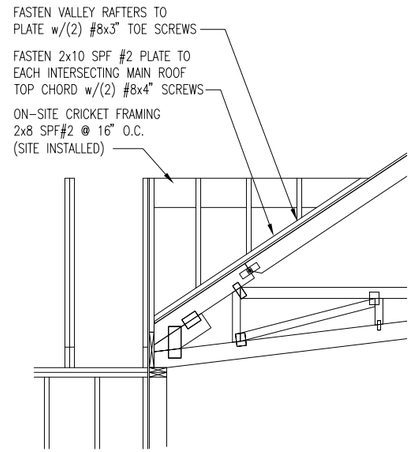

BUMP-OUT CRICKET

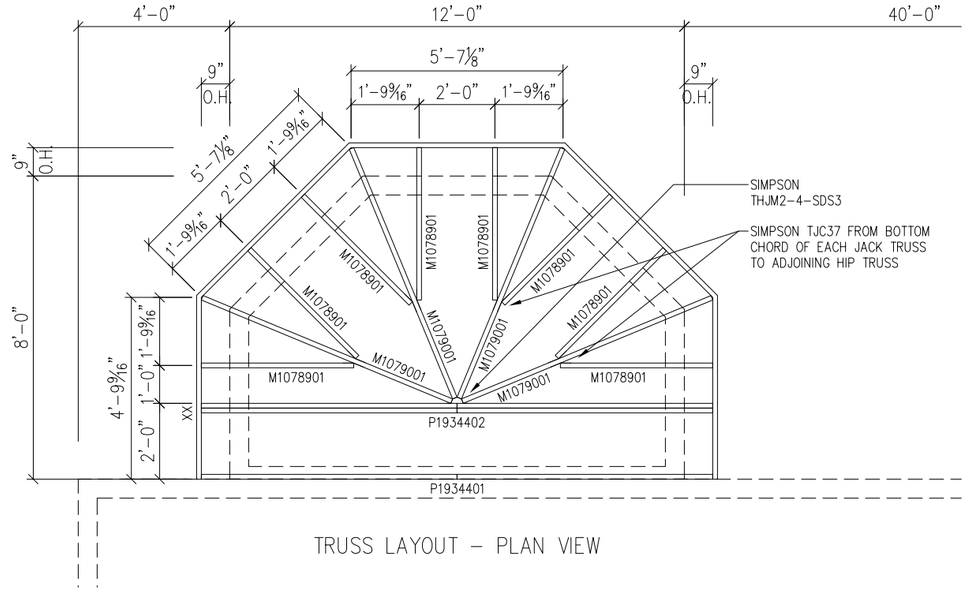

TRUSS LAYOUT - PLAN VIEW

PFS Corporation
Northeast Region
APPROVED
Michelle Floyd
01/22/2020
Approval limited to Factory Built Portion

COZY CABINS LLC
455 FARMERSVILLE RD
NEW HOLLAND, PA 17557
PHONE: 717-354-3278
FAX: 717-354-0015
WWW.MYCOZYCABINS.COM

THESE DRAWINGS HAVE BEEN PREPARED BY **GLENCO, INC.**

THIS DOCUMENT AND THE SUBJECT MATTER CONTAINED HEREIN IS PROPRIETARY AND MAY NOT BE REPRODUCED WITHOUT WRITTEN PERMISSION
www.glencoinc.com

CUSTOMER/PROJECT:
PAUL RIVERS
2324 W. REST ROAD
BATH, PA 18014

BUILDER:
COZY CABINS LLC
455 FARMERSVILLE ROAD
NEW HOLLAND, PA 17557

REV#	DATE	REVISIONS	BY

DRAWN BY: DAM
DATE: 12/17/19
SCALE: 1/4"=1'-0"
CHECKED BY: LDZ

FILE: CC-633
SQ.FT.: 1,632
STATE: PA
TYPE: RANCH
MODEL: FRONTIER
DRAWING: BUMP-OUT CROSS SECTION
SHEET: 5A

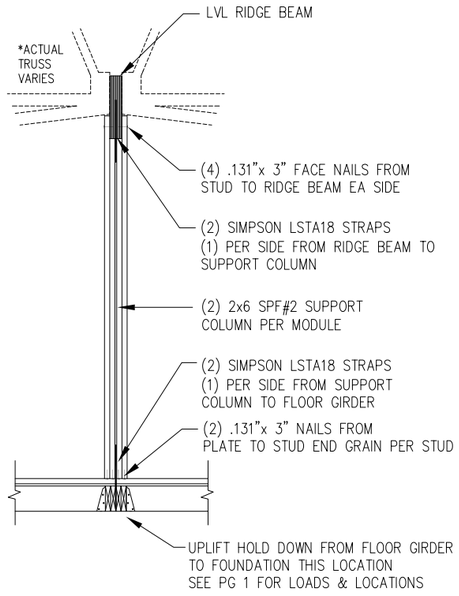

LOCATION "A"

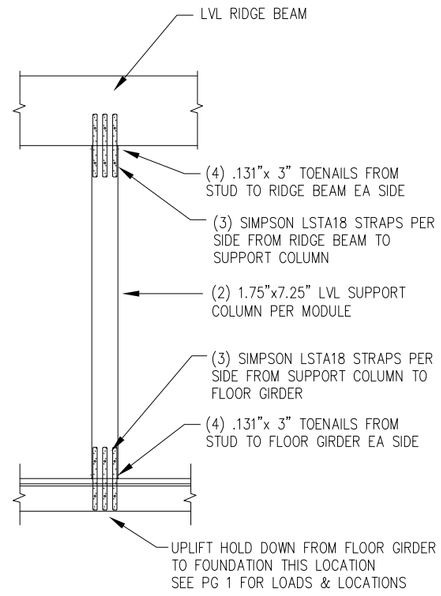

LOCATION "B"

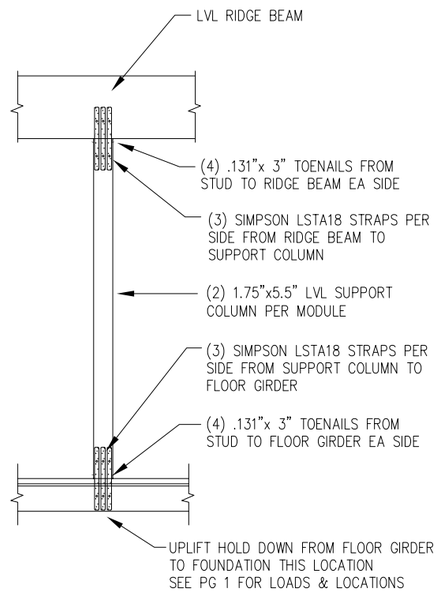

LOCATION "C"

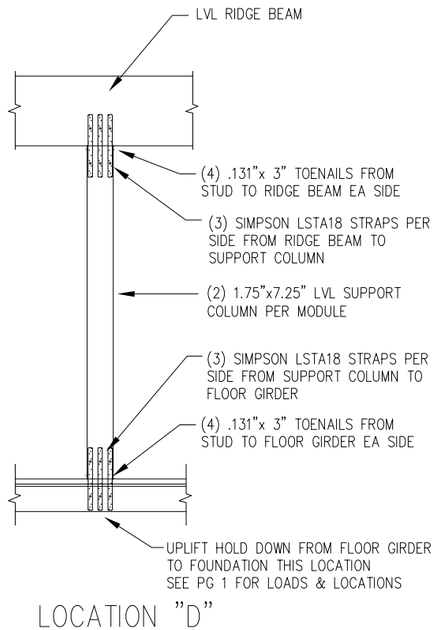

LOCATION "D"

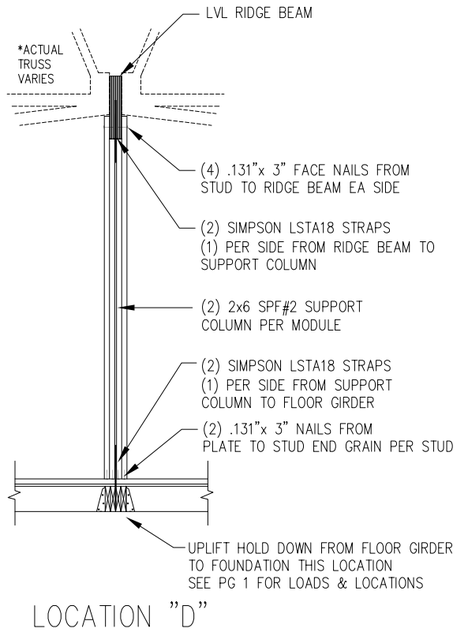

LOCATION "D"

PFS Corporation
Northeast Region
APPROVED
Michelle Floyd
01/22/2020
Approval limited to Factory Built Portion

COZY CABINS LLC
455 FARMERSVILLE RD
NEW HOLLAND, PA 17557
PHONE: 717-354-3278
FAX: 717-354-0015
WWW.MYCOZYCABINS.COM

Cozy Cabins LLC

THESE DRAWINGS HAVE BEEN PREPARED BY **GLENCO, INC.**

THIS DOCUMENT AND THE SUBJECT MATTER CONTAINED HEREIN IS PROPRIETARY AND MAY NOT BE REPRODUCED WITHOUT WRITTEN PERMISSION
www.glencoinc.com

CUSTOMER/PROJECT:
PAUL RIVERS
2324 W. REST ROAD
BATH, PA 18014

BUILDER:
COZY CABINS LLC
455 FARMERSVILLE ROAD
NEW HOLLAND, PA 17557

REV#	DATE	BY	REVISIONS

DRAWN BY: DAM
DATE: 12/17/19
SCALE: NTS
CHECKED BY: LDZ

FILE: CC-633
SQ.FT.: 1,632
STATE: PA
TYPE: RANCH
MODEL: FRONTIER
DRAWING: RIDGE BEAM DETAILS
SHEET: 5B

PROVIA WINDOW SCHEDULE

BUILDER / MANUFACTURER TO VERIFY ALL WINDOW ROUGH OPENINGS PRIOR TO CONSTRUCTION

CALL OUT	MFGR	R.O.			AREA	LIGHT	VENT	U VALUE	DP RATING	SHGC
PV 1824	PROVIA DOUBLE HUNG	18	x	24	3.00	1.35	0.4	0.26	DP50	0.27
PV 2130	PROVIA DOUBLE HUNG	21	x	30	4.38	2.3	0.82	0.26	DP50	0.27
PV 2436	PROVIA DOUBLE HUNG	24	x	36	6.00	3.5	1.36	0.26	DP50	0.27
PV 3036	PROVIA DOUBLE HUNG	30	x	36	7.50	4.71	1.8	0.26	DP50	0.27
PV 3048	PROVIA DOUBLE HUNG	30	x	48	10.00	6.66	2.83	0.26	DP50	0.27
PV 3260	PROVIA DOUBLE HUNG	32	x	60	13.33	9.34	4.17	0.26	DP50	0.27
PV 3860	PROVIA DOUBLE HUNG	38	x	60	15.83	11.76	5.73	0.26	DP50	0.27
PV 6036-2	PROVIA DOUBLE HUNG	59.63	x	36	14.91	9.42	3.6	0.26	DP50	0.27
PV 6048-2	PROVIA DOUBLE HUNG	59.63	x	48	19.88	13.32	5.66	0.26	DP50	0.27
PV 7660-2	PROVIA DOUBLE HUNG	75.63	x	60	31.51	23.52	11.46	0.26	DP50	0.27
PV 9048-3	PROVIA DOUBLE HUNG	89.25	x	48	29.75	19.98	8.49	0.26	DP50	0.27
PV 11460-3	PROVIA DOUBLE HUNG	113.25	x	60	47.19	35.28	17.19	0.26	DP50	0.27
PV 3030 CSMT	PROVIA CASEMENT	30	x	30	6.25	4.32	4.32	0.22	DP50	0.18
PV 3036 CSMT	PROVIA CASEMENT	30	x	36	7.50	5.36	5.36	0.22	DP50	0.18
VISTA GLASS (26')	(6) PROVIA TRAPEZOIDS	N/A	x	N/A	62.84	51.46	0	0.28	DP50	0.23
VISTA GLASS (28')	(6) PROVIA TRAPEZOIDS	N/A	x	N/A	78.42	65.18	0	0.28	DP50	0.23
VISTA GLASS (30')	(6) PROVIA TRAPEZOIDS	N/A	x	N/A	95.60	80.98	0	0.28	DP50	0.23

CALLOUT SUFFIXES

THE FOLLOWING SUFFIXES MAY BE APPENDED TO A CALLOUT TO SIGNIFY THE SPECIFICATIONS AS LISTED:

EGR = MEETS EGRESS REQUIREMENTS
PG = PRAIRIE GRID STYLE
NG = NO GRIDS

GENERAL NOTES:

1. WINDOWS, SKYLIGHTS, AND DOORS OF EQUAL OR BETTER "U" AND INFILTRATION VALUES, AND MANUFACTURED BY OTHER THAN SHOWN, MAY BE SUBSTITUTED. AIR INFILTRATION VALUES MUST COMPLY WITH THE MAXIMUM ALLOWABLE INFILTRATION RATES AND "U" VALUES, IF NOT CERTIFIED BY ACCREDITED LABORATORY IN ACCORDANCE WITH NFRC 100.
2. WINDOW AREA OF HABITABLE SPACE (SLEEPING AREAS, LIVING, DINING, INCLUDING KITCHEN/DINING IF NO OTHER DINING AREAS ARE PROVIDED) SHALL BE 8% OF THE FLOOR AREA FOR NATURAL LIGHT WITH 4% OPENING FOR VENTILATION MINIMUM. KITCHENETTES, BATHROOMS, AND TOILET ROOMS MAY BE PROVIDED WITH MECHANICAL VENTILATION ONLY, OR PROVIDED WITH NATURAL VENTILATION WITH AN OPENABLE AREA OF 4% MIN EXCEPT THAT THE MIN AREA SHALL NOT BE LESS THAN 1 $\frac{1}{2}$ SQ.FT. FOR BATHROOMS OR TOILET ROOMS AND NOT LESS THEN 3 SQ.FT. FOR KITCHENETTES.
3. DOORS, VENTS, AND OPENINGS IN EXTERIOR OR INTERIOR TENANT SEPARATION WALLS, STAIR AND GARAGE SEPARATION WALLS, SKYLIGHTS, RIDGE VENTS, LOUVERS OR OPENINGS PASSING THROUGH A FIRE RATED CEILING IN A STAIRS OR GARAGE SHALL BE $\frac{3}{4}$ HR. MN. FIRE RATED AND BE SELF CLOSING OR HAVE A 1 HR. MIN. OPENING PROTECTION.
4. EGRESS WINDOWS SHALL HAVE A NET CLEAR OPENING OF 5 SQ.FT. AT GRADE LEVEL FLOORS AND 5.7 SQ.FT. FOR ALL OTHER FLOORS. ALL EGRESS WINDOWS SHALL HAVE A NET CLEAR OPENING OF 24" HIGH, 20" WIDE AND A MAXIMUM SILL HEIGHT OF 44" ABOVE THE FINISHED FLOOR. WINDOWS MUST MEET EGRESS BY NORMAL OPERATION. THE REMOVAL OF SASH, TILTING/TWISTING SASH, SNAP AWAY HARDWARE ETC. TO MEET EGRESS REQUIREMENTS IS NOT PERMITTED.
5. ALL JOINTS, CONNECTIONS, AND PENETRATIONS BETWEEN CONDITIONED SPACE AND UNCONDITIONED OR OUTSIDE SPACE MUST BE SEALED. CAULKING AND SEALANTS IN THE EXTERIOR ENVELOPE MUST BE IN COMPLIANCE WITH 2015 IRC.

PROVIA EXTERIOR DOOR SCHEDULE

BUILDER / MANUFACTURER TO VERIFY ALL DOOR ROUGH OPENINGS PRIOR TO CONSTRUCTION

CALL OUT	MFGR / SERIES	R.O.			AREA	LIGHT	VENT	U VALUE	SHGC
PV 3680-6P	PROVIA 6-PANEL SOLID	38.25	x	82.50	21.9	0.0	19.3	0.14	0.01
PV 3680-9L	PROVIA 9-LITE GLASS	38.25	x	82.50	21.9	5.0	19.3	0.19	0.08
PV 3680-15L	PROVIA 15-LITE GLASS	38.25	x	82.50	21.9	9.0	19.3	0.23	0.15
PV 3680-OVL	PROVIA OVAL GLASS	38.25	x	82.50	21.9	0.0	19.3	0.21	0.12
PV 7280-FRENCH SA	PROVIA SGL-ACTIVE FRENCH	74.25	x	82.50	42.5	18.1	19.3	0.23	0.15
PV 7280-FRENCH DA	PROVIA DBL-ACTIVE FRENCH	74.75	x	82.50	42.8	18.1	38.5	0.23	0.15
PV 6080-PATIO	PROVIA PATIO	59.50	x	80.00	33.1	22.0	12.6	0.25	0.25
PV 7280-PATIO	PROVIA PATIO	71.50	x	80.00	39.7	27.7	15.6	0.25	0.25
PV 9680-PATIO	PROVIA PATIO	95.00	x	80.00	52.8	39.2	21.7	0.25	0.25
PV 10480-PATIO	PROVIA PATIO	104.00	x	80.00	57.8	41.6	15.6	0.25	0.25
PV3680-9L MB	PROVIA HALF GL. MINI BLINDS	38.00	x	82.50	21.8	0.0	19.3	0.25	0.14
PV3680-15L MB	PROVIA FULL GL. MINI BLINDS	38.00	x	82.50	21.8	0.0	0.0	0.33	0.26
PV 7280-FRENCH SA MB	PROVIA FRENCH SA MINI BLINDS	74.25	x	82.50	42.5	18.1	19.3	0.33	0.26
PV 7280-FRENCH DA MB	PROVIA FRENCH DA MINI BLINDS	74.75	x	82.50	42.8	18.1	38.5	0.33	0.26
PV 7280-PATIO MB	PROVIA PATIO MINI BLINDS	71.50	x	80.00	39.7	27.7	15.6	0.29	0.24

INTERIOR DOOR SCHEDULE

BUILDER / MANUFACTURER TO VERIFY ALL DOOR ROUGH OPENINGS PRIOR TO

TAG	CALL OUT	MFGR	R.O.			AREA
18	HINGED 1/6	STALLION	20	x	82.5	11.5
24	HINGED 2/0	STALLION	26	x	82.5	14.9
28	HINGED 2/4	STALLION	30	x	82.5	17.2
30	HINGED 2/6	STALLION	32	x	82.5	18.3
32	HINGED 2/8	STALLION	34	x	82.5	19.5
36	HINGED 3/0	STALLION	38	x	82.5	21.8
24	BIFOLD 2/0	STALLION	25.75	x	82.5	14.8
30	BIFOLD 2/6	STALLION	31.75	x	82.5	18.2
36	BIFOLD 3/0	STALLION	37.75	x	82.5	21.6
48	DBL. BIFOLD 2/0	STALLION	49.5	x	82.5	28.4
60	DBL. BIFOLD 2/6	STALLION	37.5	x	82.5	21.5
72	DBL. BIFOLD 3/0	STALLION	73.5	x	82.5	42.1
48	BI-PASS 4/0	STALLION	48	x	83.75	27.9
60	BI-PASS 5/0	STALLION	60	x	83.75	34.9
72	BI-PASS 6/0	STALLION	72	x	83.75	41.9
24	POCKET 2/0	STALLION	49.75	x	84.5	29.2
30	POCKET 2/6	STALLION	61.75	x	84.5	36.2
28	POCKET 2/8	STALLION	65.75	x	84.5	38.6
36	POCKET 3/0	STALLION	73.75	x	84.5	43.3

PFS Corporation
Northeast Region
APPROVED
Michelle Floyd
01/22/2020
Approval limited to Factory Built Portion

COZY CABINS LLC
455 FARMERSVILLE RD
NEW HOLLAND, PA 17557
PHONE: 717-354-3278
FAX: 717-354-0015
WWW.MYCOZYCABINS.COM

THESE DRAWINGS HAVE BEEN PREPARED BY **GLENCO, INC.**

THIS DOCUMENT AND THE SUBJECT MATTER CONTAINED HEREIN IS PROPRIETARY AND MAY NOT BE REPRODUCED WITHOUT WRITTEN PERMISSION
www.glencoinc.com

CUSTOMER/PROJECT: PAUL RIVERS, 2324 W. BEST ROAD, BATH, PA 18014
BUILDER: COZY CABINS LLC, 455 FARMERSVILLE ROAD, NEW HOLLAND, PA 17557

REV#	DATE	REVISIONS	BY

DRAWN BY: DAM
DATE: 12/17/19
SCALE: NTS
CHECKED BY: LDZ

FILE: CC-633
SQ.FT.: 1,632
STATE: PA
TYPE: RANCH
MODEL: FRONTIER
DRAWING: WINDOW & DOOR SCHEDULE
SHEET: 10

PFS Corporation
Northeast Region
APPROVED
Michelle Floyd
01/22/2020
Approval limited to Factory Built Portion

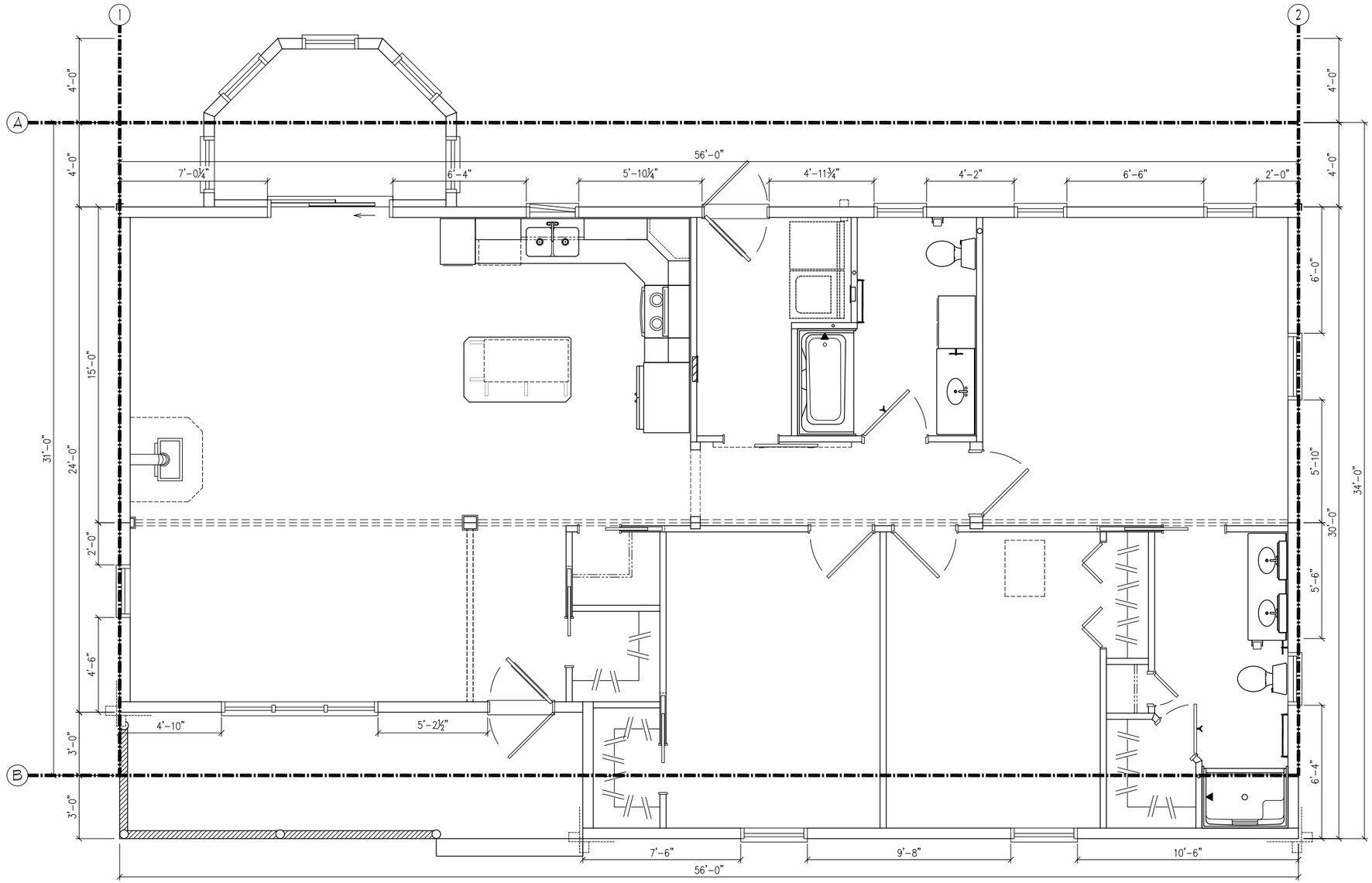

CODE	2015 IRC
# STORIES	1
SEISMIC DESIGN CATEGORY	B
WIND SPEED (Vult)	115
WIND EXPOSURE	C
EAVE TO RIDGE HEIGHT	11.29
WALL HEIGHT	8'-3"
# VERTICAL BRACED WALL LINES	See Charts Below
# HORIZONTAL BRACED WALL LINES	See Charts Below
ROOF/CEILING DEAD LOAD - PSF	15 PSF
GYP ON I/S OF WALLS	YES

CS-WSP / WSP	SHALL BE CONSTRUCTED PER TABLE BELOW								
MINIMUM NAIL		MINIMUM WOOD STRUCTURAL PANEL SPAN RATING	MINIMUM NOMINAL PANEL THICKNESS (INCHES)	MAXIMUM WALL STUD SPACING (INCHES)	PANEL NAILING SPACING		ULTIMATE DESIGN WIND SPEED Vult (MPH)		
SIZE	PENETRATION (INCHES)				EDGES (INCHES O.C.)	FIELD (INCHES O.C.)	WIND EXPOSURE CATEGORY		
							B	C	D
6d Common (2.0"x0.113")	1.5	24/0	3/8	16	6	12	140	115	110
				16	3	6	140	140	140
8d Common (2.5"x0.131")	1.75	24/16	7/16	16	6	12	170	140	135
				24	6	12	140	115	110

EXTERIOR WALL LINE	BRACED WALL SPACING	BRACED WALL METHOD	TABULATED MIN BRACED WALL TOTAL Table R602.10.3(1)	WIND EXPOSURE FACTOR Table R602.10.3(2)	RIDGE TO EAVE HEIGHT FACTOR Table R602.10.3(2)	WALL HEIGHT FACTOR Table R602.10.3(2)	WALL LINE QTY FACTOR Table R602.10.3(2)	ADDT'L 800# HOLD DOWN DEVICE	INTERIOR GYPSUM BOARD FINISH (OR EQUIVALENT)	GYPSUM BOARD FASTENING	MIN BRACED WALL LENGTH REQ'D	WALL MEETS REQUIREMENT
A	34.00	CS-WSP	5.10	1.20	1.04	0.95	1.0	1.0	1.0	1.0	6.0	YES
B	34.00	CS-WSP	5.10	1.20	1.04	0.95	1.0	1.0	1.0	1.0	6.0	YES
1	56.00	CS-WSP	8.40	1.20	1.04	0.95	1.0	1.0	1.0	1.0	9.9	YES
2	56.00	CS-WSP	8.40	1.20	1.04	0.95	1.0	1.0	1.0	1.0	9.9	YES

COZY CABINS LLC
455 FARMERSVILLE RD
NEW HOLLAND, PA 17557
PHONE: 717-354-3278
FAX: 717-354-0015
WWW.MYCOZYCABINS.COM

THESE DRAWINGS HAVE BEEN PREPARED BY
GLENCO, INC.

THIS DOCUMENT AND THE SUBJECT MATTER CONTAINED HEREIN IS PROPRIETARY AND MAY NOT BE REPRODUCED WITHOUT WRITTEN PERMISSION
www.glencoinc.com

CUSTOMER/PROJECT:
PAUL RIVERS
2324 W. BEST ROAD
BATH, PA 18014

BUILDER:
COZY CABINS LLC
455 FARMERSVILLE ROAD
NEW HOLLAND, PA 17557

REV#	DATE	REVISIONS	DRAWN BY:	DATE:	SCALE:	CHECKED BY:
			DAM	12/17/19	3/16"=1'-0"	LDZ

FILE: CC-633
SQ.FT.: 1,632
STATE: PA
TYPE: RANCH
MODEL: FRONTIER
DRAWING: BRACED WALL PLAN
SHEET: 11

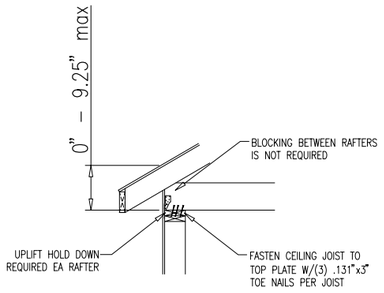

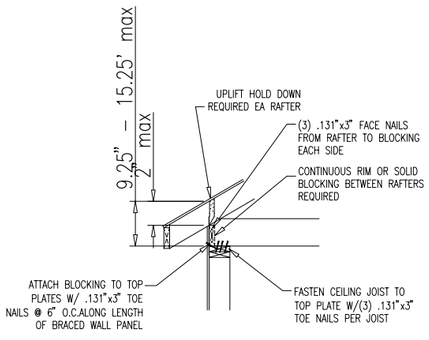

TRUSS/RAFTER TO BRACED WALL ATTACHMENT
(SEISMIC DESIGN CAT. A, B, & C)

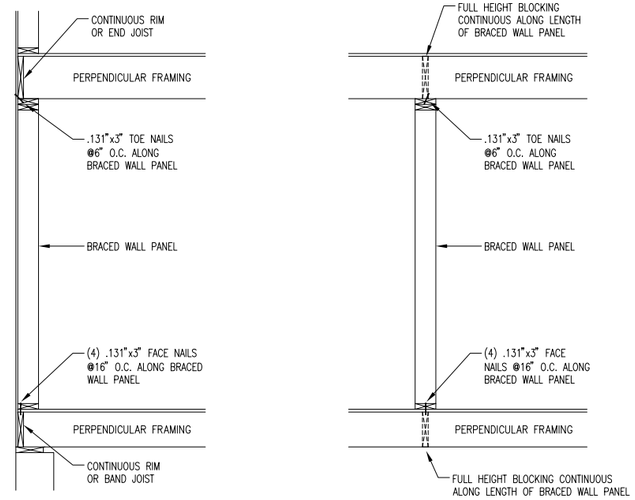

2015 INTERNATIONAL RESIDENTIAL CODE FIGURE R602.10.8(1)
BRACED WALL CONNECTION WHEN PERPENDICULAR TO FLOOR/CEILING FRAMING

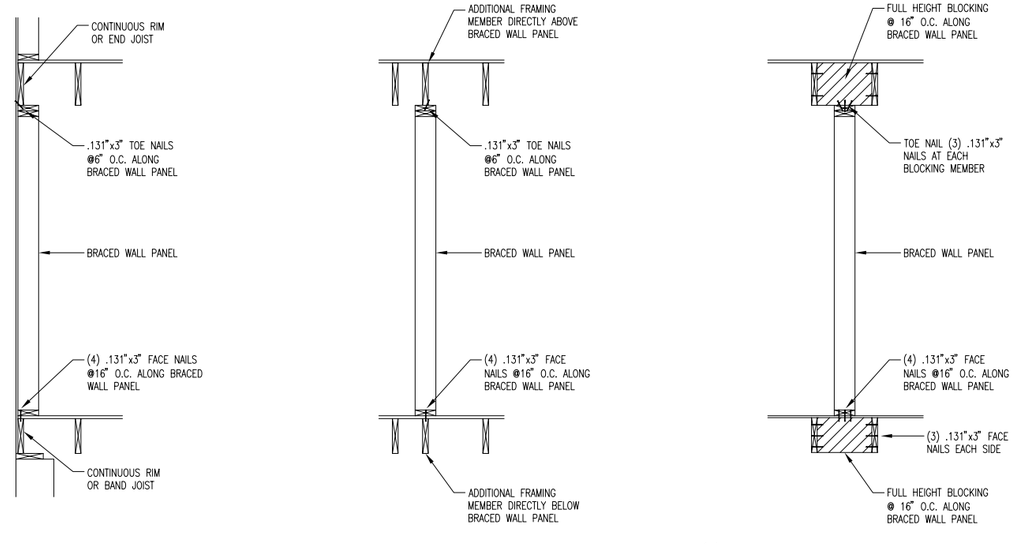

2015 INTERNATIONAL RESIDENTIAL CODE FIGURE R602.10.8(2)
BRACED WALL CONNECTION WHEN PARALLEL TO FLOOR/CEILING FRAMING

PFS Corporation
Northeast Region
APPROVED
Michelle Floyd
01/22/2020
Approval limited to Factory Built Portion

COZY CABINS LLC
455 FARMERSVILLE RD
NEW HOLLAND, PA 17557
PHONE: 717-354-3278
FAX: 717-354-0015
WWW.MYCOZYCABINS.COM

THESE DRAWINGS HAVE BEEN PREPARED BY
GLENCO, INC.

THIS DOCUMENT AND THE SUBJECT MATTER CONTAINED HEREIN IS PROPRIETARY AND MAY NOT BE REPRODUCED WITHOUT WRITTEN PERMISSION
www.glencoinc.com

CUSTOMER/PROJECT:
PAUL RIVERS
2324 W. REST ROAD
BATH, PA 18014

BUILDER:
COZY CABINS LLC
455 FARMERSVILLE ROAD
NEW HOLLAND, PA 17557

REV#	DATE	BY	REVISIONS

DRAWN BY: DAM
DATE: 12/17/19
SCALE: NTS
CHECKED BY: LDZ

FILE: CC-633
SQ.FT.: 1,632
STATE: PA
TYPE: RANCH
MODEL: FRONTIER
DRAWING: BRACED WALL DETAILS
SHEET: 11A

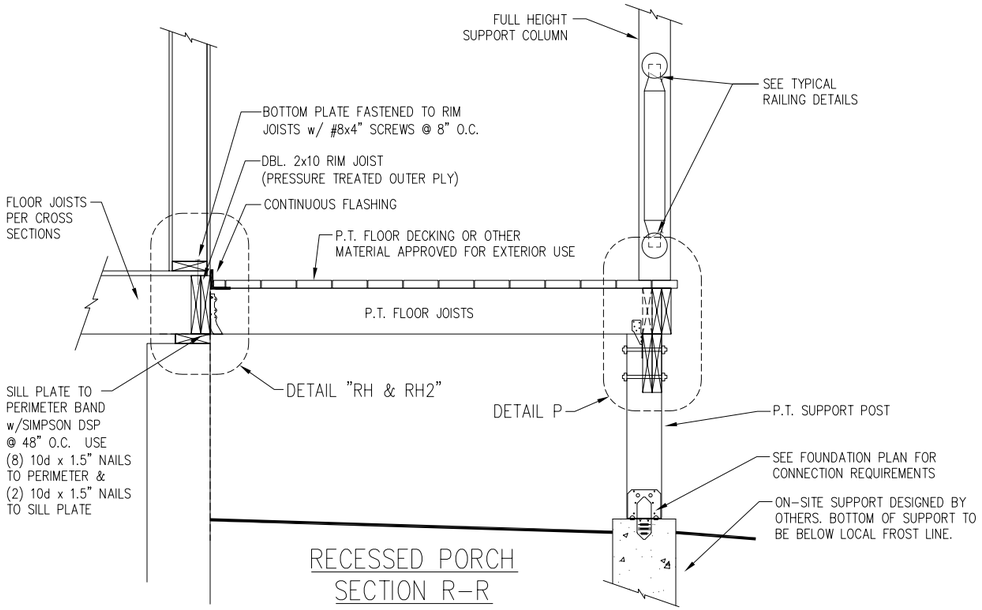

RECESSED PORCH
SECTION R-R

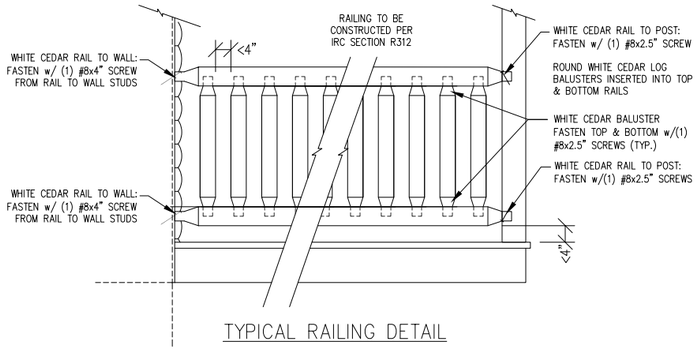

TYPICAL RAILING DETAIL

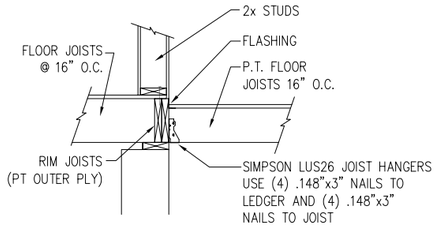

DETAIL RH

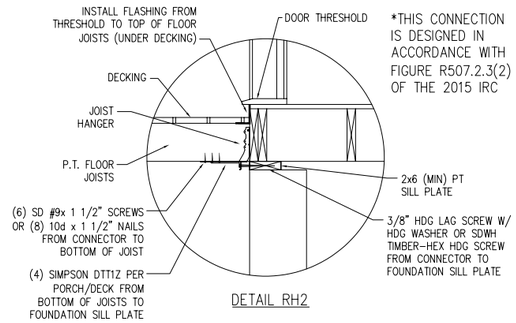

DETAIL RH2

*THIS CONNECTION IS DESIGNED IN ACCORDANCE WITH FIGURE R507.2.3(2) OF THE 2015 IRC

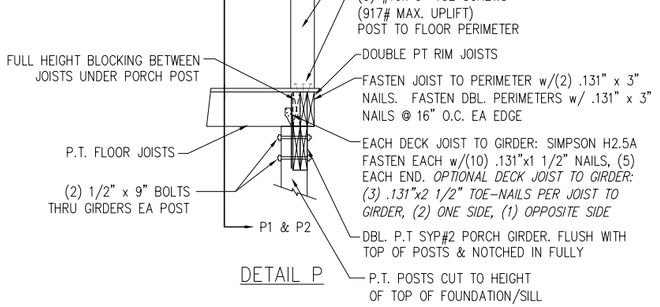

DETAIL P

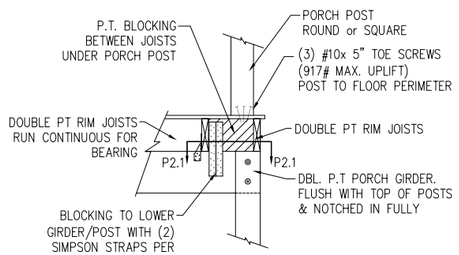

DETAIL P2
CORNER POST

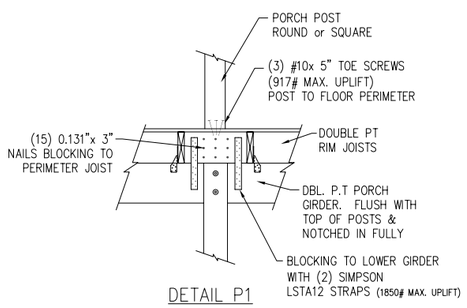

DETAIL P1
INTERMEDIATE POSTS

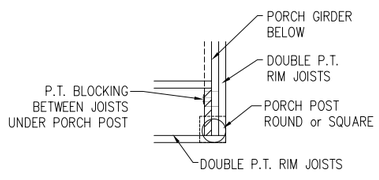

DETAIL P2.1
SEE DETAILS "P, P1 & P2" FOR ADDITIONAL CONNECTIONS

PFS Corporation
Northeast Region
APPROVED
Michelle Floyd
01/22/2020
Approval limited to Factory Built Portion

NOTES:

1. ALL EXPOSED LUMBER TO BE OF NATURALLY DURABLE WOOD OR WOOD THAT IS PRESERVATIVE-TREATED IN ACCORDANCE WITH AWPA U1. PRESERVATIVES SHALL BE LISTED IN SECTION 4 OF AWPA U1.
2. ALL LUMBER THAT IS IN CONTACT WITH CONCRETE OR THE GROUND MUST BE APPROVED PRESSURE-PRESERVATIVE-TREATED WOOD SUITABLE FOR GROUND CONTACT USE.
3. ALL SUPPORT COLUMNS SHALL BE APPROVED WOOD OF NATURAL DECAY RESISTANCE OR APPROVED PRESSURE-PRESERVATIVE-TREATED WOOD.
4. ALL FIELD CUT ENDS, NOTCHES, DRILLED HOLES OF PRESERVATIVE-TREATED WOOD SHALL BE TREATED IN THE FIELD IN ACCORDANCE WITH AWPA M4.
5. ALL NAILS USED IN THE CONSTRUCTION OF PORCHES AND DECKS SHALL BE THREADED AND MEET THE REQUIREMENTS OF ASTM F 1667. THREADED NAILS AS STATED IN THIS DOCUMENT INCLUDE HELICAL (SPIRAL) AND ANNULAR (RINK SHANK) NAILS. WOOD SCREWS SHALL MEET THE REQUIREMENTS OF ANSI/ASME B18.6.1. BOLTS AND LAG SCREWS SHALL MEET THE REQUIREMENTS OF ANSI/ASME B18.2.1.
6. FLASHING SHALL BE CORROSION-RESISTANT METAL OF A MINIMUM NOMINAL THICKNESS OF 0.019 INCHES OR AN APPROVED NON-METALLIC MATERIAL.
   6.1. ALUMINUM SHOULD NOT BE USED IN DIRECT CONTACT WITH LUMBER TREATED WITH PRESERVATIVES THAT CONTAIN COPPER SUCH AS ACQ, COPPER AZOLE, OR ACZA.
7. ALL SCREWS, BOLTS, NAILS, NUTS AND WASHERS FOR USE WITH PRESERVATIVE TREATED WOOD SHALL BE HOT-DIPPED ZINC-COATED GALVANIZED STEEL, STAINLESS STEEL, SILICON BRONZE, OR COPPER. FASTENERS SHALL BE HOT DIPPED GALVANIZED AND SHALL MEET THE REQUIREMENTS OF ASTM A 153, CLASS D FOR FASTENERS 3/8" DIAMETER AND SMALLER, OR CLASS C FOR FASTENERS WITH DIAMETERS OVER 3/8".
8. FASTENERS OTHER THAN NAILS AND TIMBER RIVETS SHALL BE PERMITTED TO BE OF MECHANICALLY DEPOSITED ZINC-COATED STEEL WITH COATING WEIGHTS IN ACCORDANCE WITH ASTM B 695, CLASS 55, MINIMUM.
9. ALL HARDWARE (JOIST HANGERS, CAST-IN-PLACE POST ANCHORS, ETC.) THAT IS EXPOSED TO WEATHER OR IN CONTACT WITH GROUND, CONCRETE OR PRESSURE TREATED LUMBER SHALL BE GALVANIZED OR SHALL BE STAINLESS STEEL. HARDWARE TO BE HOT DIPPED GALVANIZED PRIOR TO FABRICATION SHALL MEET ASTM A 653, G-185 COATING. HARDWARE TO BE HOT DIPPED GALVANIZED AFTER FABRICATION SHALL MEET ASTM A123.
10. FASTENERS AND CONNECTORS EXPOSED TO SALT WATER OR LOCATED WITHIN 300 FEET OF A SALT WATER SHORELINE SHALL BE STAINLESS STEEL GRADE 304 OR 316.
11. ALL OTHER COATED OR NON-FERROUS FASTENERS OR HARDWARE SHALL BE AS APPROVED BY THE AUTHORITY HAVING JURISDICTION.
12. HOT-DIPPED ZINC-COATED GALVANIZED STEEL CONNECTORS ARE REQUIRED AT ANY CONNECTIONS INTO CONCRETE
13. FASTENERS AND CONNECTORS INSTALLED IN TREATED LUMBER OTHER THAN MATERIAL WITH A CHEMICAL RETENTION GREATER THAN AWPA OR UC4A SHALL BE STAINLESS STEEL GRADE 304 OR 316.

COZY CABINS LLC
455 FARMERSVILLE RD
NEW HOLLAND, PA 17557
PHONE: 717-354-3278
FAX: 717-354-0015
WWW.MYCOZYCABINS.COM

THESE DRAWINGS HAVE BEEN PREPARED BY **GLENCO, INC.**

THIS DOCUMENT AND THE SUBJECT MATTER CONTAINED HEREIN IS PROPRIETARY AND MAY NOT BE REPRODUCED WITHOUT WRITTEN PERMISSION
www.glencoinc.com

CUSTOMER/PROJECT:
PAUL RIVERS
2324 W. PIKE STREET
BATH, PA 18014

BUILDER:
COZY CABINS LLC
455 FARMERSVILLE ROAD
NEW HOLLAND, PA 17557

REV#	DATE	REVISIONS	BY

DRAWN BY: DAM
DATE: 12/17/19
SCALE: NTS
CHECKED BY: LDZ

FILE: CC-633
SQ.FT.: 1,632
STATE: PA
TYPE: RANCH
MODEL: FRONTIER
DRAWING: PORCH CONNECTION DETAILS
SHEET: 12

REScheck Software Version 4.6.5

Compliance Certificate

Project Paul Rivers (CC-633)

Energy Code:	**2015 IECC**
Location:	**Bath, Pennsylvania**
Construction Type:	**Single-family**
Project Type:	**New Construction**
Conditioned Floor Area:	**1,632 ft2**
Glazing Area	**14%**
Climate Zone:	**5 (5785 HDD)**
Permit Date:	
Permit Number:	

PFS Corporation
Northeast Region
APPROVED
Michelle Floyd
01/22/2020
Approval limited to Factory Built Portion

Construction Site:
2324 W. Best Road
Bath, PA 18014

Owner/Agent:
Cozy Cabins LLC
455 Farmersville Road
New Holland, PA 17557

Designer/Contractor:
Cozy Cabins LLC
455 Farmersville Road
New Holland, PA 17557

Compliance: Passes using UA trade-off

Compliance: **5.2% Better Than Code** Maximum UA: **248** Your UA: **235**

The % Better or Worse Than Code Index reflects how close to compliance the house is based on code trade-off rules.
It DOES NOT provide an estimate of energy use or cost relative to a minimum-code home.

Envelope Assemblies

Assembly	Gross Area or Perimeter	Cavity R-Value	Cont. R-Value	U-Factor	UA
Main Ceiling: Flat Ceiling or Scissor Truss	1,659	38.0	0.0	0.030	50
Bird Room Ceiling: Flat Ceiling or Scissor Truss	84	38.0	0.0	0.030	3
Recessed Front Wall: Wood Frame, 16" o.c.	177	21.0	0.0	0.057	7
Window: PV 9048-3: Vinyl/Fiberglass Frame, Double Pane with Low-E	30			0.260	8
Door: PV 3680-9L: Solid	22			0.190	4
Front Wall: Wood Frame, 16" o.c.	251	21.0	0.0	0.057	12
Window: PV 3860: Vinyl/Fiberglass Frame, Double Pane with Low-E	16			0.260	4
Window: PV 3860: Vinyl/Fiberglass Frame, Double Pane with Low-E	16			0.260	4
Right Wall: Wood Frame, 16" o.c.	249	21.0	0.0	0.057	13
Window: PV 3048: Vinyl/Fiberglass Frame, Double Pane with Low-E	10			0.260	3
Window: PV 3860: Vinyl/Fiberglass Frame, Double Pane with Low-E	16			0.260	4
Back Wall: Wood Frame, 16" o.c.	325	21.0	0.0	0.057	15
Window: PV 3048: Vinyl/Fiberglass Frame, Double Pane with Low-E	10			0.260	3
Window: PV 3048: Vinyl/Fiberglass Frame, Double Pane with Low-E	10			0.260	3
Window: PV 3048: Vinyl/Fiberglass Frame, Double Pane with Low-E	10			0.260	3
Door: PV 3680-9L: Solid	22			0.190	4
Window: PV 3036 CSMT: Vinyl/Fiberglass Frame, Double Pane with Low-E	8			0.220	2

Assembly	Gross Area or Perimeter	Cavity R-Value	Cont. R-Value	U-Factor	UA
Bird Room Walls: Wood Frame, 16" o.c.	191	21.0	0.0	0.057	7
Window: PV 3260: Vinyl/Fiberglass Frame, Double Pane with Low-E	13			0.260	3
Window: PV 3260: Vinyl/Fiberglass Frame, Double Pane with Low-E	13			0.260	3
Window: PV 3260: Vinyl/Fiberglass Frame, Double Pane with Low-E	13			0.260	3
Window: PV 3260: Vinyl/Fiberglass Frame, Double Pane with Low-E	13			0.260	3
Window: PV 3260: Vinyl/Fiberglass Frame, Double Pane with Low-E	13			0.260	3
Left Wall: Wood Frame, 16" o.c.	201	21.0	0.0	0.057	11
Window: PV 3048: Vinyl/Fiberglass Frame, Double Pane with Low-E	10			0.260	3
Recessed Left Wall: Wood Frame, 16" o.c.	47	21.0	0.0	0.057	3
Main Floor: All-Wood Joist/Truss, Over Unconditioned Space	1,548	30.0	0.0	0.033	51
Bird Room Floor: All-Wood Joist/Truss, Over Unconditioned Space	84	30.0	0.0	0.033	3

Compliance Statement: The proposed building design described here is consistent with the building plans, specifications, and other calculations submitted with the permit application. The proposed building has been designed to meet the 2015 IECC requirements in RES*check* Version 4.6.5 and to comply with the mandatory requirements listed in the RES*check* Inspection Checklist.

Dwayne Keister - Designer / Draftsman	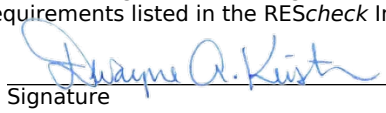	01/15/2020
Name - Title	Signature	Date

PFS Corporation
Northeast Region
APPROVED
Michelle Floyd
01/22/2020
Approval limited to Factory Built Portion

RES*check* Software Version 4.6.5

Inspection Checklist

Energy Code: 2015 IECC

Requirements: 0.0% were addressed directly in the RES*check* software

Text in the "Comments/Assumptions" column is provided by the user in the REScheck Requirements screen. For each requirement, the user certifies that a code requirement will be met and how that is documented, or that an exception is being claimed. Where compliance is itemized in a separate table, a reference to that table is provided.

Section # & Req.ID	Pre-Inspection/Plan Review	Plans Verified Value	Field Verified Value	Complies?	Comments/Assumptions
103.1, 103.2 [PR1][1]	Construction drawings and documentation demonstrate energy code compliance for the building envelope. Thermal envelope represented on construction documents.			☐Complies ☐Does Not ☐Not Observable ☐Not Applicable	
103.1, 103.2, 403.7 [PR3][1]	Construction drawings and documentation demonstrate energy code compliance for lighting and mechanical systems. Systems serving multiple dwelling units must demonstrate compliance with the IECC Commercial Provisions.			☐Complies ☐Does Not ☐Not Observable ☐Not Applicable	
302.1, 403.7 [PR2][2]	Heating and cooling equipment is sized per ACCA Manual S based on loads calculated per ACCA Manual J or other methods approved by the code official.	Heating: Btu/hr____ Cooling: Btu/hr____	Heating: Btu/hr____ Cooling: Btu/hr____	☐Complies ☐Does Not ☐Not Observable ☐Not Applicable	

Additional Comments/Assumptions:

PFS Corporation
Northeast Region
APPROVED
Michelle Floyd
01/22/2020
Approval limited to Factory Built Portion

1	High Impact (Tier 1)	2	Medium Impact (Tier 2)	3	Low Impact (Tier 3)

Section # & Req.ID	Foundation Inspection	Complies?	Comments/Assumptions
303.2.1 [FO11][2]	A protective covering is installed to protect exposed exterior insulation and extends a minimum of 6 in. below grade.	☐Complies ☐Does Not ☐Not Observable ☐Not Applicable	
403.9 [FO12][2]	Snow- and ice-melting system controls installed.	☐Complies ☐Does Not ☐Not Observable ☐Not Applicable	

Additional Comments/Assumptions:

PFS Corporation
Northeast Region
APPROVED
Michelle Floyd
01/22/2020
Approval limited to Factory Built Portion

1	High Impact (Tier 1)	2	Medium Impact (Tier 2)	3	Low Impact (Tier 3)

Section # & Req.ID	Framing / Rough-In Inspection	Plans Verified Value	Field Verified Value	Complies?	Comments/Assumptions
402.1.1, 402.3.4 [FR1][1]	Door U-factor.	U-____	U-____	☐Complies ☐Does Not ☐Not Observable ☐Not Applicable	*See the Envelope Assemblies table for values.*
402.1.1, 402.3.1, 402.3.3, 402.5 [FR2][1]	Glazing U-factor (area-weighted average).	U-____	U-____	☐Complies ☐Does Not ☐Not Observable ☐Not Applicable	*See the Envelope Assemblies table for values.*
303.1.3 [FR4][1]	U-factors of fenestration products are determined in accordance with the NFRC test procedure or taken from the default table.			☐Complies ☐Does Not ☐Not Observable ☐Not Applicable	
402.4.1.1 [FR23][1]	Air barrier and thermal barrier installed per manufacturer's instructions.			☐Complies ☐Does Not ☐Not Observable ☐Not Applicable	
402.4.3 [FR20][1]	Fenestration that is not site built is listed and labeled as meeting AAMA /WDMA/CSA 101/I.S.2/A440 or has infiltration rates per NFRC 400 that do not exceed code limits.			☐Complies ☐Does Not ☐Not Observable ☐Not Applicable	
402.4.5 [FR16][2]	IC-rated recessed lighting fixtures sealed at housing/interior finish and labeled to indicate ≤2.0 cfm leakage at 75 Pa.			☐Complies ☐Does Not ☐Not Observable ☐Not Applicable	
403.3.1 [FR12][1]	Supply and return ducts in attics insulated >= R-8 where duct is >= 3 inches in diameter and >= R-6 where < 3 inches. Supply and return ducts in other portions of the building insulated >= R-6 for diameter >= 3 inches and R-4.2 for < 3 inches in diameter.			☐Complies ☐Does Not ☐Not Observable ☐Not Applicable	
403.3.5 [FR15][3]	Building cavities are not used as ducts or plenums.			☐Complies ☐Does Not ☐Not Observable ☐Not Applicable	
403.4 [FR17][2]	HVAC piping conveying fluids above 105 ºF or chilled fluids below 55 ºF are insulated to ≥R-3.	R-____	R-____	☐Complies ☐Does Not ☐Not Observable ☐Not Applicable	
403.4.1 [FR24][1]	Protection of insulation on HVAC piping.			☐Complies ☐Does Not ☐Not Observable ☐Not Applicable	
403.5.3 [FR18][2]	Hot water pipes are insulated to ≥R-3.	R-____	R-____	☐Complies ☐Does Not ☐Not Observable ☐Not Applicable	
403.6 [FR19][2]	Automatic or gravity dampers are installed on all outdoor air intakes and exhausts.			☐Complies ☐Does Not ☐Not Observable ☐Not Applicable	

PFS Corporation
Northeast Region
APPROVED
Michelle Floyd
01/22/2020
Approval limited to
Factory Built Portion

1	High Impact (Tier 1)	2	Medium Impact (Tier 2)	3	Low Impact (Tier 3)

Additional Comments/Assumptions:

PFS Corporation
Northeast Region
APPROVED
Michelle Floyd
01/22/2020
Approval limited to Factory Built Portion

1	High Impact (Tier 1)	2	Medium Impact (Tier 2)	3	Low Impact (Tier 3)

Section # & Req.ID	Insulation Inspection	Plans Verified Value	Field Verified Value	Complies?	Comments/Assumptions
303.1 [IN13][2]	All installed insulation is labeled or the installed R-values provided.			☐Complies ☐Does Not ☐Not Observable ☐Not Applicable	
402.1.1, 402.2.6 [IN1][1]	Floor insulation R-value.	R-____ ☐ Wood ☐ Steel	R-____ ☐ Wood ☐ Steel	☐Complies ☐Does Not ☐Not Observable ☐Not Applicable	*See the Envelope Assemblies table for values.*
303.2, 402.2.7 [IN2][1]	Floor insulation installed per manufacturer's instructions and in substantial contact with the underside of the subfloor, or floor framing cavity insulation is in contact with the top side of sheathing, or continuous insulation is installed on the underside of floor framing and extends from the bottom to the top of all perimeter floor framing members.			☐Complies ☐Does Not ☐Not Observable ☐Not Applicable	
402.1.1, 402.2.5, 402.2.6 [IN3][1]	Wall insulation R-value. If this is a mass wall with at least ½ of the wall insulation on the wall exterior, the exterior insulation requirement applies (FR10).	R-____ ☐ Wood ☐ Mass ☐ Steel	R-____ ☐ Wood ☐ Mass ☐ Steel	☐Complies ☐Does Not ☐Not Observable ☐Not Applicable	*See the Envelope Assemblies table for values.*
303.2 [IN4][1]	Wall insulation is installed per manufacturer's instructions.			☐Complies ☐Does Not ☐Not Observable ☐Not Applicable	

Additional Comments/Assumptions:

PFS Corporation
Northeast Region
APPROVED
Michelle Floyd
01/22/2020
Approval limited to Factory Built Portion

1	High Impact (Tier 1)	2	Medium Impact (Tier 2)	3	Low Impact (Tier 3)

Section # & Req.ID	Final Inspection Provisions	Plans Verified Value	Field Verified Value	Complies?	Comments/Assumptions
402.1.1, 402.2.1, 402.2.2, 402.2.6 [FI1][1]	Ceiling insulation R-value.	R-____ ☐ Wood ☐ Steel	R-____ ☐ Wood ☐ Steel	☐Complies ☐Does Not ☐Not Observable ☐Not Applicable	*See the Envelope Assemblies table for values.*
303.1.1.1, 303.2 [FI2][1]	Ceiling insulation installed per manufacturer's instructions. Blown insulation marked every 300 ft².			☐Complies ☐Does Not ☐Not Observable ☐Not Applicable	
402.2.3 [FI22][2]	Vented attics with air permeable insulation include baffle adjacent to soffit and eave vents that extends over insulation.			☐Complies ☐Does Not ☐Not Observable ☐Not Applicable	
402.2.4 [FI3][1]	Attic access hatch and door insulation ≥R-value of the adjacent assembly.	R-____	R-____	☐Complies ☐Does Not ☐Not Observable ☐Not Applicable	
402.4.1.2 [FI17][1]	Blower door test @ 50 Pa. <=5 ach in Climate Zones 1-2, and <=3 ach in Climate Zones 3-8.	ACH 50 =____	ACH 50 =____	☐Complies ☐Does Not ☐Not Observable ☐Not Applicable	
403.3.4 [FI4][1]	Duct tightness test result of <=4 cfm/100 ft2 across the system or <=3 cfm/100 ft2 without air handler @ 25 Pa. For rough-in tests, verification may need to occur during Framing Inspection.	____ cfm/100 ft²	____ cfm/100 ft²	☐Complies ☐Does Not ☐Not Observable ☐Not Applicable	
403.3.3 [FI27][1]	Ducts are pressure tested to determine air leakage with either: Rough-in test: Total leakage measured with a pressure differential of 0.1 inch w.g. across the system including the manufacturer's air handler enclosure if installed at time of test. Postconstruction test: Total leakage measured with a pressure differential of 0.1 inch w.g. across the entire system including the manufacturer's air handler enclosure.	____ cfm/100 ft²	____ cfm/100 ft²	☐Complies ☐Does Not ☐Not Observable ☐Not Applicable	
403.3.2.1 [FI24][1]	Air handler leakage designated by manufacturer at <=2% of design air flow.			☐Complies ☐Does Not ☐Not Observable ☐Not Applicable	
403.1.1 [FI9][2]	Programmable thermostats installed for control of primary heating and cooling systems and initially set by manufacturer to code specifications.	PFS Corporation Northeast Region APPROVED Michelle Floyd 01/22/2020 Approval limited to Factory Built Portion		☐Complies ☐Does Not ☐Not Observable ☐Not Applicable	
403.1.2 [FI10][2]	Heat pump thermostat installed on heat pumps.			☐Complies ☐Does Not ☐Not Observable ☐Not Applicable	
403.5.1 [FI11][2]	Circulating service hot water systems have automatic or accessible manual controls.			☐Complies ☐Does Not ☐Not Observable ☐Not Applicable	

1	High Impact (Tier 1)	2	Medium Impact (Tier 2)	3	Low Impact (Tier 3)

Section # & Req.ID	Final Inspection Provisions	Plans Verified Value	Field Verified Value	Complies?	Comments/Assumptions
403.6.1 [FI25][2]	All mechanical ventilation system fans not part of tested and listed HVAC equipment meet efficacy and air flow limits.			☐Complies ☐Does Not ☐Not Observable ☐Not Applicable	
403.2 [FI26][2]	Hot water boilers supplying heat through one- or two-pipe heating systems have outdoor setback control to lower boiler water temperature based on outdoor temperature.			☐Complies ☐Does Not ☐Not Observable ☐Not Applicable	
403.5.1.1 [FI28][2]	Heated water circulation systems have a circulation pump. The system return pipe is a dedicated return pipe or a cold water supply pipe. Gravity and thermos-syphon circulation systems are not present. Controls for circulating hot water system pumps start the pump with signal for hot water demand within the occupancy. Controls automatically turn off the pump when water is in circulation loop is at set-point temperature and no demand for hot water exists.			☐Complies ☐Does Not ☐Not Observable ☐Not Applicable	
403.5.1.2 [FI29][2]	Electric heat trace systems comply with IEEE 515.1 or UL 515. Controls automatically adjust the energy input to the heat tracing to maintain the desired water temperature in the piping.			☐Complies ☐Does Not ☐Not Observable ☐Not Applicable	
403.5.2 [FI30][2]	Water distribution systems that have recirculation pumps that pump water from a heated water supply pipe back to the heated water source through a cold water supply pipe have a demand recirculation water system. Pumps have controls that manage operation of the pump and limit the temperature of the water entering the cold water piping to 104ºF.	PFS Corporation Northeast Region APPROVED Michelle Floyd 01/22/2020 Approval limited to Factory Built Portion		☐Complies ☐Does Not ☐Not Observable ☐Not Applicable	
403.5.4 [FI31][2]	Drain water heat recovery units tested in accordance with CSA B55.1. Potable water-side pressure loss of drain water heat recovery units < 3 psi for individual units connected to one or two showers. Potable water-side pressure loss of drain water heat recovery units < 2 psi for individual units connected to three or more showers.			☐Complies ☐Does Not ☐Not Observable ☐Not Applicable	
404.1 [FI6][1]	75% of lamps in permanent fixtures or 75% of permanent fixtures have high efficacy lamps. Does not apply to low-voltage lighting.			☐Complies ☐Does Not ☐Not Observable ☐Not Applicable	
404.1.1 [FI23][3]	Fuel gas lighting systems have no continuous pilot light.			☐Complies ☐Does Not ☐Not Observable ☐Not Applicable	

1	High Impact (Tier 1)	2	Medium Impact (Tier 2)	3	Low Impact (Tier 3)

Section # & Req.ID	Final Inspection Provisions	Plans Verified Value	Field Verified Value	Complies?	Comments/Assumptions
401.3 [FI7][2]	Compliance certificate posted.			☐Complies ☐Does Not ☐Not Observable ☐Not Applicable	
303.3 [FI18][3]	Manufacturer manuals for mechanical and water heating systems have been provided.			☐Complies ☐Does Not ☐Not Observable ☐Not Applicable	

Additional Comments/Assumptions:

PFS Corporation
Northeast Region
APPROVED
Michelle Floyd
01/22/2020
Approval limited to Factory Built Portion

1	High Impact (Tier 1)	2	Medium Impact (Tier 2)	3	Low Impact (Tier 3)

2015 IECC Energy Efficiency Certificate

Insulation Rating	R-Value
Above-Grade Wall	21.00
Below-Grade Wall	0.00
Floor	30.00
Ceiling / Roof	38.00
Ductwork (unconditioned spaces):	_____

Glass & Door Rating	U-Factor	SHGC
Window	0.26	0.27
Door	0.19	

Heating & Cooling Equipment	Efficiency
Heating System:_____	_____
Cooling System:_____	_____
Water Heater:_____	_____

Name: _____ **Date:** _____

Comments

PFS Corporation
Northeast Region
APPROVED
Michelle Floyd
01/22/2020
Approval limited to Factory Built Portion

Job	Truss	Truss Type	Qty	Ply	Cozy Cabins 212
99677	HC431807	HINGE CATHEDRAL	1	1	

Universal Forest Products Inc., Grand Rapids, MI 49525, Mike Patten — 8.220 e Aug 13 2018 MiTek Industries, Inc. Mon Dec 23 13:46:52 2019

Copyright ©2019 Universal Forest Products, Inc. All Rights Reserved

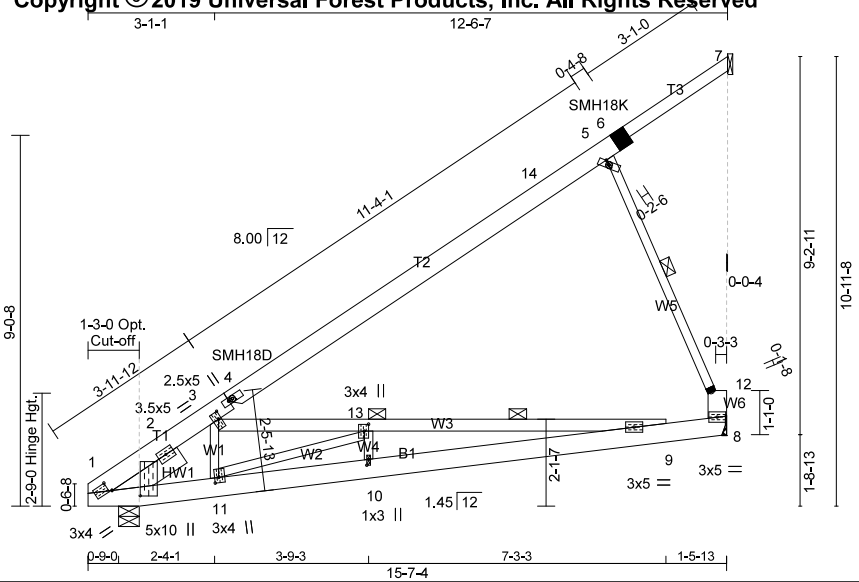

Alt. Porch Detail

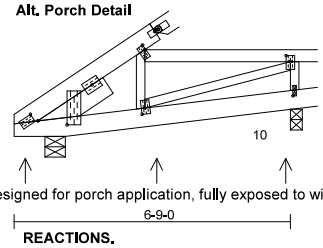

REACTIONS.
Max Horz 7=-222(LC 13), 1=348(LC 9)
Max Uplift 8=-294(LC 9), 10=-73(LC 8), 1=-108(LC 9)
Max Grav 8=636(LC 13), 10=468(LC 5), 1=752(LC 13)

Plate Offsets (X,Y)— [1:0-0-13,0-3-2], [1:0-1-9,0-8-4], [3:0-2-4,0-0-12], [4:0-1-4,0-0-0], [5:0-1-4,0-1-0], [10:0-1-12,0-0-8], [11:0-1-8,0-1-4], [13:0-2-0,0-1-4]

SPACING-: 2-0-0	SPACING-: 1-4-0	SPACING-: 1-0-0		CSI.		DEFL.	in	(loc)	l/defl	L/d	PLATES	GRIP
LOADING (psf)	LOADING (psf)	LOADING (psf)	Plate Grip DOL 1.15	TC 0.69	Vert(LL)	-0.14	9-10	>999	240	MT20	137/130
TCLL 30.8	TCLL 46.2	TCLL 61.6	Lumber DOL 1.15	BC 0.61	Vert(CT)	-0.28	9-10	>642	180	MT18HS	197/144
(Ground Snow=40.0)	(Ground Snow=60.0)	(Ground Snow=80.0)	Rep Stress Incr YES	WB 0.42	Horz(CT)	0.02	8	n/a	n/a		
TCDL 10.0	TCDL 15.0	TCDL 20.0	Code IBC2015/TPI2014	Matrix-R						Weight: 84 lb	
BCLL 0.0 *	BCLL 0.0 *	BCLL 0.0 *	IBC2012/TPI2007							FT = 0%	
BCDL 10.0	BCDL 15.0	BCDL 20.0									

LUMBER-
TOP CHORD 2x6 SPF No.2 *Except*
T2: 2x6 SPF 1650F 1.5E, T3: 2x4 SPF No.2
BOT CHORD 2x6 SPF No.2
WEBS 2x3 SPF Stud *Except*
W6: 1-1/2X5-1/2 LP-LSL TC 1.75E, W3: 2x4 SPF No.2
SLIDER Left 2x6 SPF Stud 1-10-13

BRACING-
TOP CHORD Structural wood sheathing directly applied or 5-11-8 oc purlins, except end verticals.
BOT CHORD Rigid ceiling directly applied or 9-10-12 oc bracing.
WEBS 1 Row at midpt 9-13, 5-12
JOINTS 1 Brace at Jt(s): 12, 13

REACTIONS. (lb/size) 8=686/Mechanical, 7=-0/Mechanical, 1=875/0-6-0 (min. 0-1-8)
Max Horz 7=-222(LC 13), 1=348(LC 9)
Max Uplift 8=-324(LC 9), 1=-146(LC 9)
Max Grav 8=794(LC 13), 1=952(LC 13)

FORCES. (lb) - Maximum Compression/Maximum Tension
TOP CHORD 1-2=-1594/306, 2-3=-1512/314, 3-4=-825/51, 4-14=-724/14, 5-14=-403/26, 5-6=-384/74, 6-7=-272/83, 8-12=-506/269
BOT CHORD 1-11=-564/1022, 10-11=-457/1397, 9-10=-463/1398, 8-9=-131/267
WEBS 3-11=0/310, 3-13=-810/436, 9-13=-1320/330, 10-13=0/315, 11-13=-832/0, 5-12=-558/297

REQUIRED FIELD JOINT CONNECTIONS - Maximum Compression (lb)/ Maximum Tension (lb)/ Maximum Shear (lb)/ Maximum Moment (lb-in)
6=362/76/138/0, 12=558/297/234/0

NOTES-
1) Wind: ASCE 7-10; Vult=115mph (3-second gust) Vasd=91mph @24in o.c.; TCDL=3.0psf; BCDL=3.0psf; (Alt. 141mph @16in o.c.; TCDL=4.5psf; BCDL=4.5psf); (Alt. 163mph @12in o.c.; TCDL=6.0psf; BCDL=6.0psf); h=30ft; Cat. II; Exp C; Enclosed; MWFRS (envelope) gable end zone and C-C Exterior(2) zone; cantilever left exposed ;C-C for members and forces & MWFRS for reactions shown; Lumber DOL=1.60 plate grip DOL=1.60
2) TCLL: ASCE 7-10; Pg=40.0 psf (ground snow); Ps=30.8 psf (roof snow); Category II; Exp C; Partially Exp.; Ct=1.10
3) Roof design snow load has been reduced to account for slope.
4) Unbalanced snow loads have been considered for this design.
5) All plates are MT20 plates unless otherwise indicated.
6) See HINGE PLATE DETAILS for plate placement.
7) Provisions must be made to prevent lateral movement of hinged member(s) during transportation.
8) All additional member connections shall be provided by others for forces as indicated.
9) This truss has been designed for a 10.0 psf bottom chord live load nonconcurrent with any other live loads.
10) * This truss has been designed for a live load of 20.0psf on the bottom chord in all areas where a rectangle 3-6-0 tall by 2-0-0 wide will fit between the bo chord and any other members.
11) Bearing at joint(s) 1 considers parallel to grain value using ANSI/TPI 1 angle to grain formula. Building designer should verify capacity of bearing surface
12) Provide mechanical connection (by others) of truss to bearing plate capable of withstanding 324 lb uplift at joint 8 and 146 lb uplift at joint 1.
13) This truss is designed in accordance with the 2015 International Building Code section 2306.1 and referenced standard ANSI/TPI 1.
14) This truss is designed in accordance with the 2012 IBC Sec 2306.1 and referenced standard ANSI/TPI 1
15) Take precaution to keep the chords in plane, any bending or twisting of the hinge plate must be repaired before the building is put into service.
16) The field-installed members are an integral part of the truss design. Retain a design professional to specify final field connections and temporary supports All field-installed members must be properly fastened prior to applying any loading to the truss. This design anticipates the final set position.
17) Based on HC431805 - Reduced loading from 50 psf

The professional engineering seal indicates that a licensed professional engineer has designed the truss under the standards referenced within this document, not necessarily the current state building code. The engineering seal is not an approval to use in a specific state. The final determination on whether a truss design is acceptable under the locally adopted building code rest with the building official or designated appointee.

PFS Corporation
Northeast Region
APPROVED
Michelle Floyd
01/22/2020
Approval limited to Factory Built Portion

12/27/2019

WARNING - *Verify design parameters and READ NOTES*

Universal Forest Products, Inc. 2801 EAST BELTLINE RD, NE
PHONE (616)-364-6161 FAX (616)-365-0060 GRAND RAPIDS, MI 49525

Truss shall not be cut or modified without approval of the truss design engineer.
This component has only been designed for the loads noted on this drawing. Construction and lifting forces have not been considered. The builder is responsible for lifting methods and system design. Builder responsibilities are defined under TPI1. This design is based only upon parameters shown, and is for an individual building component to be installed and loaded vertically. Applicability of design parameters and proper incorporation of component is responsibility of building designer - not truss designer. Bracing shown is for lateral support of individual web members only. Additional temporary bracing to insure stability during construction is the responsibility of the erector. Additional permanent bracing of the overall structure is the responsibility of the building designer. For general guidance regarding fabrication, quality control, storage, delivery, erection and bracing, consult BCSI 1-06 from the Wood Truss Council of America and Truss Plate Institute Recommendation available from WTCA, 6300 Enterprise LN, Madison, WI 53719 J:\support\MitekSupp\templates\ufp.tpe

Universal Forest Products®

Job	Truss	MFG	Customer
99677	HC431807	212	COZY CABINS

The professional engineering seal indicates that a licensed professional has reviewed the design under the standards referenced within this document, not necessarily the current state building code. The engineering seal is not an approval to use a design in a specific state. The final determination on whether a truss design is acceptable under the locally adopted building code rest with the building official or designated appointee.

PFS Corporation
Northeast Region
APPROVED
Michelle Floyd
01/22/2020
Approval limited to Factory Built Portion

Corporate Engineering
2801 East Beltline, NE Grand Rapids, MI 49525-9736 (616) 364-6161 Fax (616) 365-0060
ufpi.com

Job	Truss	Truss Type	Qty	Ply	
99682	M1078901	MONO TRUSS	1	1	Cozy Cabins 212

Universal Forest Products Inc., Grand Rapids, MI 49525, Mike Patten — 8.220 e Aug 13 2018 MiTek Industries, Inc. Mon Dec 23 16:19:55 2019

Copyright ©2019 Universal Forest Products, Inc. All Rights Reserved

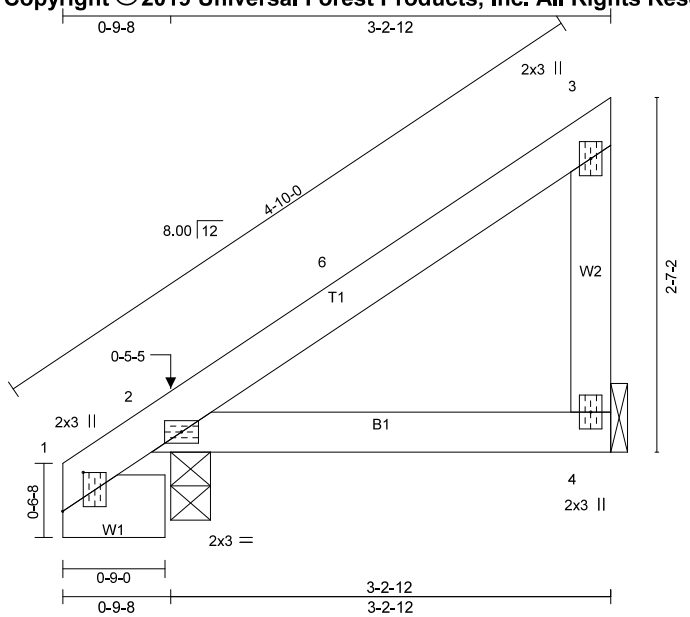

PFS Corporation
Northeast Region
APPROVED
Michelle Floyd
01/22/2020
Approval limited to Factory Built Portion

Plate Offsets (X,Y)— [1:0-3-7,0-1-13]

LOADING (psf)		**SPACING-**	2-0-0	**CSI.**		**DEFL.**	in	(loc)	l/defl	L/d	**PLATES**	**GRIP**
TCLL	30.8	Plate Grip DOL	1.15	TC	0.18	Vert(LL)	-0.01	2-4	>999	240	MT20	197/144
(Ground Snow=40.0)		Lumber DOL	1.15	BC	0.09	Vert(CT)	-0.01	2-4	>999	180		
TCDL	10.0	Rep Stress Incr	YES	WB	0.00	Horz(CT)	0.00		n/a	n/a		
BCLL	0.0 *	Code IBC2015/TPI2014		Matrix-P							Weight: 13 lb	FT = 0%
BCDL	10.0											

LUMBER-
TOP CHORD 2x4 SPF No.2
BOT CHORD 2x4 SPF No.2
WEBS 2x4 SPF Stud *Except*
W1: 2x6 SPF Stud

BRACING-
TOP CHORD Structural wood sheathing directly applied or 3-2-12 oc purlins, except end verticals.
BOT CHORD Rigid ceiling directly applied or 10-0-0 oc bracing.

REACTIONS. (lb/size) 2=230/0-3-8 (min. 0-1-8), 4=148/Mechanical
Max Horz 2=107(LC 9)
Max Uplift 2=-19(LC 9), 4=-57(LC 9)
Max Grav 2=231(LC 14), 4=155(LC 14)

FORCES. (lb) - Maximum Compression/Maximum Tension
TOP CHORD 1-2=0/52, 2-6=-78/4, 6-7=-57/5, 3-7=-54/56, 3-4=-125/82
BOT CHORD 2-4=0/0

NOTES-
1) Wind: ASCE 7-10; Vult=115mph (3-second gust) Vasd=91mph; TCDL=6.0psf; BCDL=6.0psf; h=30ft; Cat. II; Exp C; Enclosed; MWFRS (envelope) gable end zone and C-C Exterior(2) zone;C-C for members and forces & MWFRS for reactions shown; Lumber DOL=1.60 plate grip DOL=1.60
2) TCLL: ASCE 7-10; Pg=40.0 psf (ground snow); Ps=30.8 psf (roof snow); Category II; Exp C; Partially Exp.; Ct=1.10
3) Roof design snow load has been reduced to account for slope.
4) Unbalanced snow loads have been considered for this design.
5) This truss has been designed for greater of min roof live load of 16.0 psf or 2.00 times flat roof load of 30.8 psf on overhangs non-concurrent with other live loads.
6) This truss has been designed for a 10.0 psf bottom chord live load nonconcurrent with any other live loads.
7) * This truss has been designed for a live load of 20.0psf on the bottom chord in all areas where a rectangle 3-6-0 tall by 2-0-0 wide will fit between the bott chord and any other members.
8) Provide mechanical connection (by others) of truss to bearing plate capable of withstanding 19 lb uplift at joint 2 and 57 lb uplift at joint 4.
9) This truss is designed in accordance with the 2015 International Building Code section 2306.1 and referenced standard ANSI/TPI 1.

COMMONWEALTH OF PENNSYLVANIA
REGISTERED PROFESSIONAL
STUART LEE WALTER
ENGINEER
PE071668
12/26/2019

The professional engineering seal indicates that a licensed professional engineer has designed the truss under the standards referenced within this document, not necessarily the current state building code. The engineering seal is not an approval to use in a specific state. The final determination on whether a truss design is acceptable under the locally adopted building code rest with the building official or designated appointee.

WARNING - ***Verify design parameters and READ NOTES***

Truss shall not be cut or modified without approval of the truss design engineer.
This component has only been designed for the loads noted on this drawing. Construction and lifting forces have not been considered. The builder is responsible for lifting methods and system design. Builder responsibilities are defined under TPI1. This design is based only upon parameters shown, and is for an individual building component to be installed and loaded vertically. Applicability of design parameters and proper incorporation of component is responsibility of building designer - not truss designer. Bracing shown is for lateral support of individual web members only. Additional temporary bracing to insure stability during construction is the responsibility of the erector. Additional permanent bracing of the overall structure is the responsibility of the building designer. For general guidance regarding fabrication, quality control, storage, delivery, erection and bracing, consult BCSI 1-06 from the Wood Truss Council of America and Truss Plate Institute Recommendation available from WTCA, 6300 Enterprise LN, Madison, WI 53719 J:\support\MitekSupp\templates\ufp.tpe

Universal Forest Products, Inc. 2801 EAST BELTLINE RD, NE
PHONE (616)-364-6161 FAX (616)-365-0060 GRAND RAPIDS, MI 49525

Job	Truss	Truss Type	Qty	Ply	
99682	M1079001	MONO TRUSS	1	1	Cozy Cabins 212

Universal Forest Products Inc., Grand Rapids, MI 49525, Mike Patten — 8.220 e Aug 13 2018 MiTek Industries, Inc. Mon Dec 23 16:32:02 2019

Copyright ©2019 Universal Forest Products, Inc. All Rights Reserved

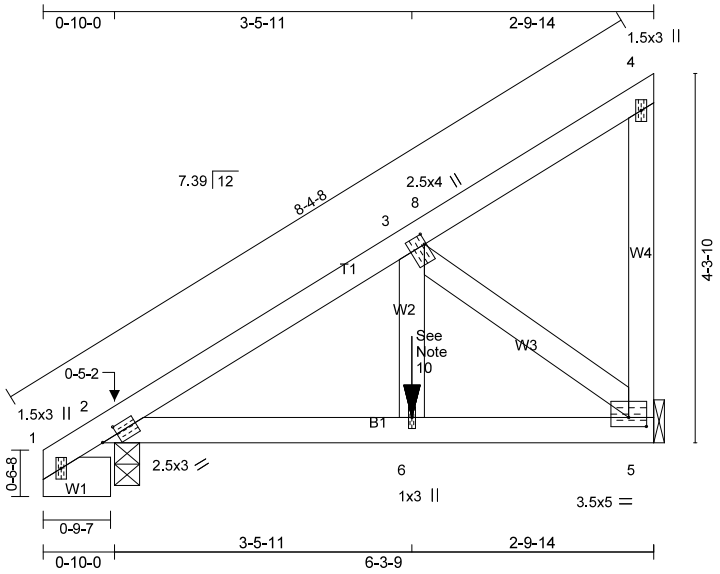

PFS Corporation
Northeast Region
APPROVED
Michelle Floyd
01/22/2020
Approval limited to Factory Built Portion

Plate Offsets (X,Y)— [2:0-2-5,0-1-2], [3:0-1-8,0-0-4], [5:0-2-8,0-1-4]

LOADING (psf)		**SPACING-**	2-0-0	**CSI.**		**DEFL.**	in	(loc)	l/defl	L/d	**PLATES**	**GRIP**
TCLL	30.8	Plate Grip DOL	1.15	TC	0.21	Vert(LL)	-0.01	6	>999	240	MT20	197/144
(Ground Snow=40.0)		Lumber DOL	1.15	BC	0.17	Vert(CT)	-0.01	2-6	>999	180		
TCDL	10.0	Rep Stress Incr	NO	WB	0.17	Horz(CT)	0.00	5	n/a	n/a		
BCLL	0.0 *	Code IBC2015/TPI2014		Matrix-P							Weight: 29 lb	FT = 0%
BCDL	10.0											

LUMBER-
TOP CHORD 2x4 SPF No.2
BOT CHORD 2x4 SPF No.2
WEBS 2x4 SPF Stud *Except*
W1: 2x6 SPF Stud

BRACING-
TOP CHORD Structural wood sheathing directly applied or 6-0-0 oc purlins, except end verticals[P]
BOT CHORD Rigid ceiling directly applied or 10-0-0 oc bracing.

REACTIONS. (lb/size) 2=503/0-3-8 (min. 0-1-8), 5=460/Mechanical
Max Horz 2=180(LC 8)
Max Uplift 2=-87(LC 8), 5=-185(LC 8)
Max Grav 2=513(LC 13), 5=499(LC 13)

FORCES. (lb) - Maximum Compression/Maximum Tension
TOP CHORD 1-2=0/52, 2-3=-597/80, 3-8=-86/0, 4-8=-59/39, 4-5=-102/43
BOT CHORD 2-6=-181/445, 5-6=-181/445
WEBS 3-6=-92/341, 3-5=-581/236

NOTES-
1) Wind: ASCE 7-10; Vult=115mph (3-second gust) Vasd=91mph; TCDL=6.0psf; BCDL=6.0psf; h=30ft; Cat. II; Exp C; Enclosed; MWFRS (envelope) gable end zone; Lumber DOL=1.60 plate grip DOL=1.60
2) TCLL: ASCE 7-10; Pg=40.0 psf (ground snow); Ps=30.8 psf (roof snow); Category II; Exp C; Partially Exp.; Ct=1.10
3) Roof design snow load has been reduced to account for slope.
4) Unbalanced snow loads have been considered for this design.
5) This truss has been designed for greater of min roof live load of 16.6 psf or 2.00 times flat roof load of 30.8 psf on overhangs non-concurrent with other live loads.
6) This truss has been designed for a 10.0 psf bottom chord live load nonconcurrent with any other live loads.
7) * This truss has been designed for a live load of 20.0psf on the bottom chord in all areas where a rectangle 3-6-0 tall by 2-0-0 wide will fit between the bottom chord and any other members.
8) Provide mechanical connection (by others) of truss to bearing plate capable of withstanding 87 lb uplift at joint 2 and 185 lb uplift at joint 5.
9) This truss is designed in accordance with the 2015 International Building Code section 2306.1 and referenced standard ANSI/TPI 1.
10) Hanger(s) or other connection device(s) shall be provided sufficient to support concentrated load(s) 135 lb down and 69 lb up at 3-5-11, and 135 lb down and 69 lb up at 3-5-11 on bottom chord. The design/selection of such connection device(s) is the responsibility of others.
11) In the LOAD CASE(S) section, loads applied to the face of the truss are noted as front (F) or back (B).

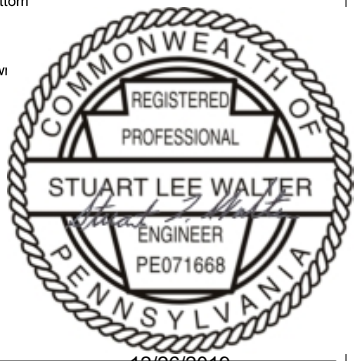

12/23/2019

The professional engineering seal indicates that a licensed professional engineer has designed the truss under the standards referenced within this document, not necessarily the current state building code. The engineering seal is not an approval to use in a specific state. The final determination on whether a truss design is acceptable under the locally adopted building code rest with the building official or designated appointee.

WARNING - ***Verify design parameters and READ NOTES***

Truss shall not be cut or modified without approval of the truss design engineer.
This component has only been designed for the loads noted on this drawing. Construction and lifting forces have not been considered. The builder is responsible for lifting methods and system design. Builder responsibilities are defined under TPI1. This design is based only upon parameters shown, and is for an individual building component to be installed and loaded vertically. Applicability of design parameters and proper incorporation of component is responsibility of building designer - not truss designer. Bracing shown is for lateral support of individual web members only. Additional temporary bracing to insure stability during construction is the responsibility of the erector. Additional permanent bracing of the overall structure is the responsibility of the building designer. For general guidance regarding fabrication, quality control, storage, delivery, erection and bracing, consult BCSI 1-06 from the Wood Truss Council of America and Truss Plate Institute Recommendation available from WTCA, 6300 Enterprise LN, Madison, WI 53719 J:\support\MitekSupp\templates\ufp.tpe

Universal Forest Products, Inc. 2801 EAST BELTLINE RD, NE
PHONE (616)-364-6161 FAX (616)-365-0060 GRAND RAPIDS, MI 49525

Job	Truss	Truss Type	Qty	Ply	Cozy Cabins 212
99682	P1934401	QUEENPOST	1	1	

Universal Forest Products Inc., Grand Rapids, MI 49525, Mike Patten — 8.220 e Aug 13 2018 MiTek Industries, Inc. Mon Dec 23 16:46:04 2019

Copyright ©2019 Universal Forest Products, Inc. All Rights Reserved

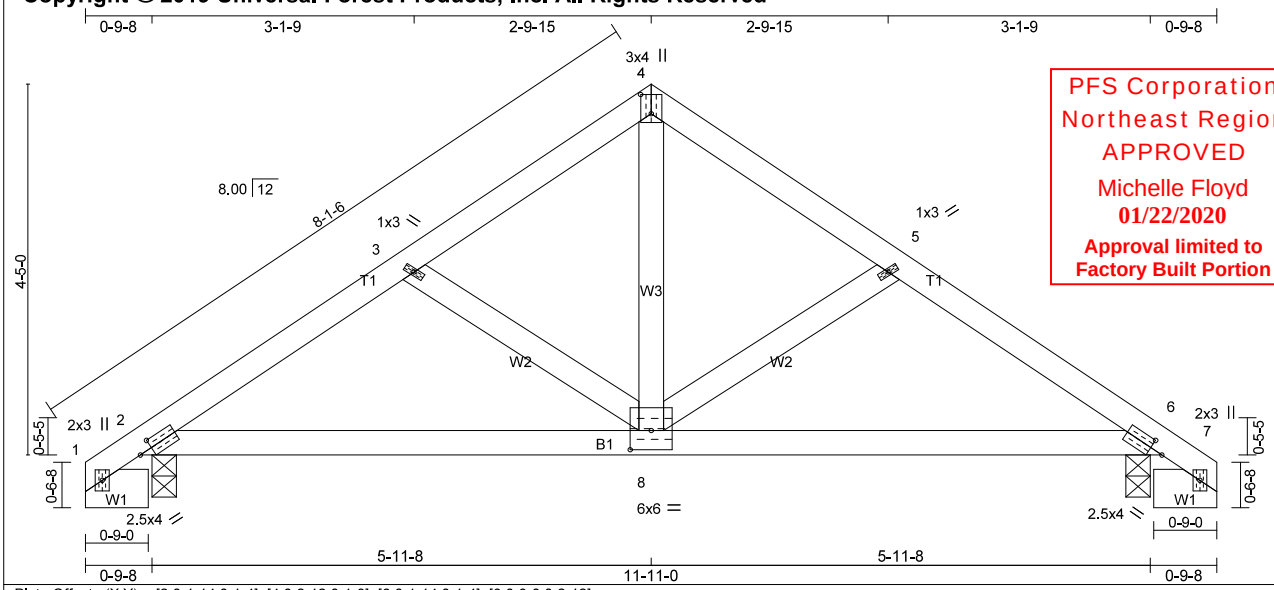

PFS Corporation
Northeast Region
APPROVED
Michelle Floyd
01/22/2020
Approval limited to Factory Built Portion

Plate Offsets (X,Y)— [2:0-1-14,0-1-4], [4:0-2-12,0-1-8], [6:0-1-14,0-1-4], [8:0-3-0,0-2-12]

LOADING (psf)		**SPACING-**	2-0-0	**CSI.**		**DEFL.**	in	(loc)	l/defl	L/d	**PLATES**	**GRIP**
TCLL	51.6	Plate Grip DOL	1.15	TC	0.36	Vert(LL)	-0.03	8	>999	240	MT20	197/144
(Ground Snow=67.0)		Lumber DOL	1.15	BC	0.35	Vert(CT)	-0.05	6-8	>999	180		
TCDL	10.0	Rep Stress Incr	YES	WB	0.21	Horz(CT)	0.02	6	n/a	n/a		
BCLL	0.0 *	Code	IBC2015/TPI2014	Matrix-R								
BCDL	10.0										Weight: 47 lb	FT = 0%

LUMBER-
TOP CHORD 2x4 SPF No.2
BOT CHORD 2x4 SPF No.2
WEBS 2x4 SPF Stud *Except*
W1: 2x6 SPF Stud

BRACING-
TOP CHORD Structural wood sheathing directly applied or 5-1-15 oc purlins. [P]
BOT CHORD Rigid ceiling directly applied or 10-0-0 oc bracing.

REACTIONS. (lb/size) 2=950/0-3-8 (min. 0-1-8), 6=950/0-3-8 (min. 0-1-8)
Max Horz 2=-134(LC 7)
Max Uplift2=-89(LC 9), 6=-89(LC 10)

FORCES. (lb) - Maximum Compression/Maximum Tension
TOP CHORD 1-2=0/82, 2-3=-1198/171, 3-4=-881/150, 4-5=-881/150, 5-6=-1198/171, 6-7=0/82
BOT CHORD 2-8=-102/899, 6-8=-57/899
WEBS 3-8=-371/128, 4-8=-62/497, 5-8=-371/129

NOTES-
1) Wind: ASCE 7-10; Vult=115mph (3-second gust) Vasd=91mph; TCDL=6.0psf; BCDL=6.0psf; h=30ft; Cat. II; Exp C; Enclosed; MWFRS (envelope) gable end zone and C-C Exterior(2) zone;C-C for members and forces & MWFRS for reactions shown; Lumber DOL=1.60 plate grip DOL=1.60
2) TCLL: ASCE 7-10; Pg=67.0 psf (ground snow); Ps=51.6 psf (roof snow); Category II; Exp C; Partially Exp.; Ct=1.10
3) Roof design snow load has been reduced to account for slope.
4) Unbalanced snow loads have been considered for this design.
5) This truss has been designed for greater of min roof live load of 16.0 psf or 2.00 times flat roof load of 51.6 psf on overhangs non-concurrent with other live loads.
6) This truss has been designed for a 10.0 psf bottom chord live load nonconcurrent with any other live loads.
7) * This truss has been designed for a live load of 20.0psf on the bottom chord in all areas where a rectangle 3-6-0 tall by 2-0-0 wide will fit between the bottom chord and any other members.
8) Provide mechanical connection (by others) of truss to bearing plate capable of withstanding 89 lb uplift at joint 2 and 89 lb uplift at joint 6.
9) This truss is designed in accordance with the 2015 International Building Code section 2306.1 and referenced standard ANSI/TPI 1.

COMMONWEALTH OF PENNSYLVANIA
REGISTERED PROFESSIONAL ENGINEER
STUART LEE WALTER
PE071668
12/26/2019

The professional engineering seal indicates that a licensed professional engineer has designed the truss under the standards referenced within this document, not necessarily the current state building code. The engineering seal is not an approval to use in a specific state. The final determination on whether a truss design is acceptable under the locally adopted building code rest with the building official or designated appointee.

WARNING - ***Verify design parameters and READ NOTES***
Truss shall not be cut or modified without approval of the truss design engineer.
This component has only been designed for the loads noted on this drawing. Construction and lifting forces have not been considered. The builder is responsible for lifting methods and system design. Builder responsibilities are defined under TPI1. This design is based only upon parameters shown, and is for an individual building component to be installed and loaded vertically. Applicability of design parameters and proper incorporation of component is responsibility of building designer - not truss designer. Bracing shown is for lateral support of individual web members only. Additional temporary bracing to insure stability during construction is the responsibility of the erector. Additional permanent bracing of the overall structure is the responsibility of the building designer. For general guidance regarding fabrication, quality control, storage, delivery, erection and bracing, consult BCSI 1-06 from the Wood Truss Council of America and Truss Plate Institute Recommendation available from WTCA, 6300 Enterprise LN, Madison, WI 53719 J:\support\MitekSupp\templates\ufp.tpe

Universal Forest Products, Inc. 2801 EAST BELTLINE RD, NE
PHONE (616)-364-6161 FAX (616)-365-0060 GRAND RAPIDS, MI 49525

Job	Truss	Truss Type	Qty	Ply	
99682	P1934402	QUEENPOST	1	2	Cozy Cabins 212

Universal Forest Products Inc., Grand Rapids, MI 49525, Mike Patten — 8.220 e Aug 13 2018 MiTek Industries, Inc. Mon Dec 23 16:44:30 2019

Copyright ©2019 Universal Forest Products, Inc. All Rights Reserved

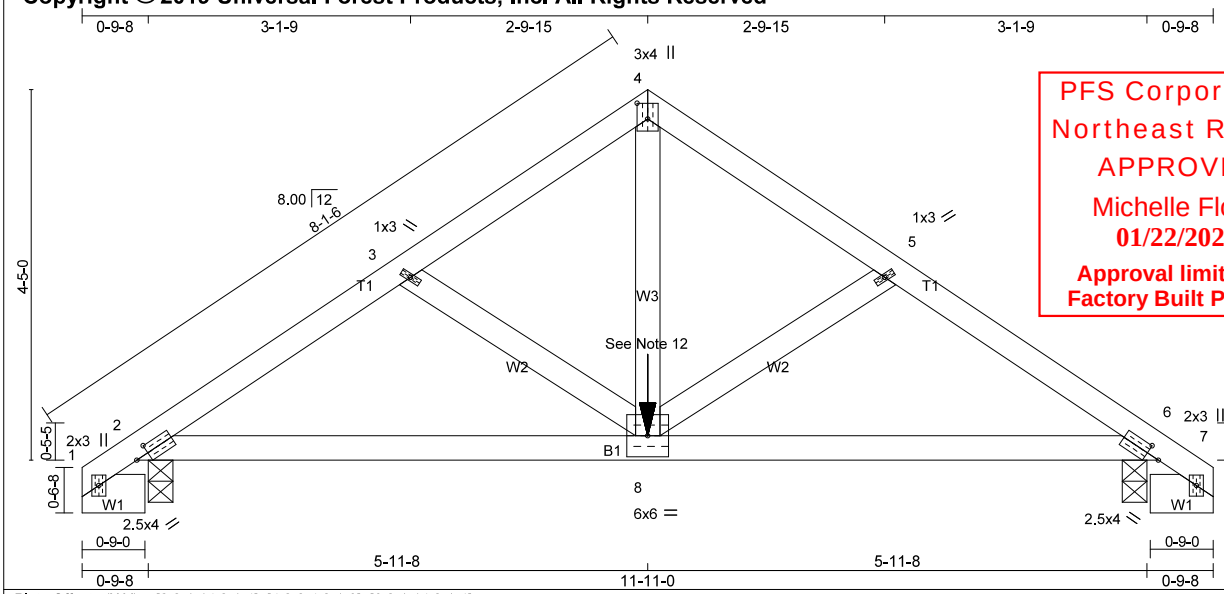

PFS Corporation
Northeast Region
APPROVED
Michelle Floyd
01/22/2020
Approval limited to Factory Built Portion

Plate Offsets (X,Y)— [2:0-1-14,0-1-4], [4:0-2-4,0-1-8], [6:0-1-14,0-1-4]

LOADING (psf)		**SPACING-**	2-0-0	**CSI.**		**DEFL.**	in	(loc)	l/defl	L/d	**PLATES**	**GRIP**
TCLL	51.6	Plate Grip DOL	1.15	TC	0.52	Vert(LL)	-0.04	8	>999	240	MT20	197/144
(Ground Snow=67.0)		Lumber DOL	1.15	BC	0.48	Vert(CT)	-0.05	2-8	>999	180		
TCDL	10.0	Rep Stress Incr	NO	WB	0.49	Horz(CT)	0.02	6	n/a	n/a		
BCLL	0.0 *	Code IBC2015/TPI2014		Matrix-R							Weight: 95 lb	FT = 0%
BCDL	10.0											

LUMBER-
TOP CHORD 2x4 SPF No.2
BOT CHORD 2x4 SPF No.2
WEBS 2x4 SPF Stud *Except*
W1: 2x6 SPF Stud

BRACING-
TOP CHORD Structural wood sheathing directly applied or 6-0-0 oc purlins. [P]
BOT CHORD Rigid ceiling directly applied or 10-0-0 oc bracing.

REACTIONS. (lb/size) 2=1887/0-3-8 (min. 0-1-8), 6=1887/0-3-8 (min. 0-1-8)
Max Horz 2=134(LC 7)
Max Uplift2=-503(LC 8), 6=-503(LC 9)

FORCES. (lb) - Maximum Compression/Maximum Tension
TOP CHORD 1-2=0/82, 2-3=-2798/815, 3-4=-2508/820, 4-5=-2508/820, 5-6=-2798/816, 6-7=0/82
BOT CHORD 2-8=-675/2198, 6-8=-608/2198
WEBS 3-8=-293/147, 4-8=-812/2274, 5-8=-293/148

NOTES-
1) 2-ply truss to be connected together with 10d (0.131"x3") nails as follows:
Top chords connected as follows: 2x4 - 1 row at 0-9-0 oc.
Bottom chords connected as follows: 2x4 - 1 row at 0-9-0 oc.
Webs connected as follows: 2x4 - 1 row at 0-9-0 oc, Except member 8-4 2x4 - 1 row at 0-4-0 oc.
2) All loads are considered equally applied to all plies, except if noted as front (F) or back (B) face in the LOAD CASE(S) section. Ply to ply connections have been provided to distribute only loads noted as (F) or (B), unless otherwise indicated.
3) Wind: ASCE 7-10; Vult=115mph (3-second gust) Vasd=91mph; TCDL=6.0psf; BCDL=6.0psf; h=30ft; Cat. II; Exp C; Enclosed; MWFRS (envelope) gable end zone; Lumber DOL=1.60 plate grip DOL=1.60
4) TCLL: ASCE 7-10; Pg=67.0 psf (ground snow); Ps=51.6 psf (roof snow); Category II; Exp C; Partially Exp.; Ct=1.10
5) Roof design snow load has been reduced to account for slope.
6) Unbalanced snow loads have been considered for this design.
7) This truss has been designed for greater of min roof live load of 16.0 psf or 2.00 times flat roof load of 51.6 psf on overhangs non-concurrent with other liv loads.
8) This truss has been designed for a 10.0 psf bottom chord live load nonconcurrent with any other live loads.
9) * This truss has been designed for a live load of 20.0psf on the bottom chord in all areas where a rectangle 3-6-0 tall by 2-0-0 wide will fit between the bott chord and any other members.
10) Provide mechanical connection (by others) of truss to bearing plate capable of withstanding 503 lb uplift at joint 2 and 503 lb uplift at joint 6.
11) This truss is designed in accordance with the 2015 International Building Code section 2306.1 and referenced standard ANSI/TPI 1.
12) Hanger(s) or other connection device(s) shall be provided sufficient to support concentrated load(s) 1874 lb down and 827 lb up at 5-11-8 on bottom cho
The design/selection of such connection device(s) is the responsibility of others.

COMMONWEALTH OF PENNSYLVANIA
REGISTERED PROFESSIONAL
STUART LEE WALTER
ENGINEER
PE071668
12/26/2019

The professional engineering seal indicates that a licensed professional engineer has designed the truss under the standards referenced within this document, not necessarily the current state building code. The engineering seal is not an approval to use in a specific state. The final determination on whether a truss design is acceptable under the locally adopted building code rest with the building official or designated appointee.

WARNING - ***Verify design parameters and READ NOTES***

Universal Forest Products, Inc. 2801 EAST BELTLINE RD, NE
PHONE (616)-364-6161 FAX (616)-365-0060 GRAND RAPIDS, MI 49525

Truss shall not be cut or modified without approval of the truss design engineer.
This component has only been designed for the loads noted on this drawing. Construction and lifting forces have not been considered. The builder is responsible for lifting methods and system design. Builder responsibilities are defined under TPI1. This design is based only upon parameters shown, and is for an individual building component to be installed and loaded vertically. Applicability of design parameters and proper incorporation of component is responsibility of building designer - not truss designer. Bracing shown is for lateral support of individual web members only. Additional temporary bracing to insure stability during construction is the responsibility of the erector. Additional permanent bracing of the overall structure is the responsibility of the building designer. For general guidance regarding fabrication, quality control, storage, delivery, erection and bracing, consult BCSI 1-06 from the Wood Truss Council of America and Truss Plate Institute Recommendation available from WTCA, 6300 Enterprise LN, Madison, WI 53719 J:\support\MitekSupp\templates\ufp.tpe

Project: CC-633 Structural Calcs 01-15-2020 DAK

Location: Ceiling Girder CG1-1 ABCD - Snow
Multi-Loaded Multi-Span Beam
[2015 International Residential Code(2015 NDS)]
1.75 IN x 18.0 IN x 40.67 FT (16.7 + 10.7 + 13.3)
2.0 Rigidlam LVL - Roseburg Forest Products
Section Adequate By: 102.3%
Controlling Factor: Shear

StruCalc 9.0
Glenco, Inc.
217 East Main Street
Middleburg, PA 17842

StruCalc Version 10.0.1.6 1/15/2020 3:36:44 PM

DEFLECTIONS	Left		Center		Right	
Live Load	0.18	IN L/1108	-0.05	IN L/2399	0.09	IN L/1833
Dead Load	0.08	in	-0.01	in	0.04	in
Total Load	0.26	IN L/758	-0.07	IN L/1899	0.12	IN L/1284

Live Load Deflection Criteria: L/240 Total Load Deflection Criteria: L/180

REACTIONS	A		B		C		D	
Live Load	1904	lb	4716	lb	3960	lb	1614	lb
Dead Load	956	lb	2241	lb	1664	lb	787	lb
Total Load	2860	lb	6957	lb	5624	lb	2401	lb
Bearing Length	2.18	in	5.30	in	4.28	in	1.83	in

BEAM DATA	Left		Center		Right	
Span Length	16.67	ft	10.67	ft	13.33	ft
Unbraced Length-Top	2	ft	2	ft	2	ft
Unbraced Length-Bottom	2	ft	2	ft	2	ft
Live Load Duration Factor	1.15					
Notch Depth	0.00					

MATERIAL PROPERTIES

2.0 Rigidlam LVL - Roseburg Forest Products

	Base Values		Adjusted	
Bending Stress:	Fb = 3100 psi		Fb' = 3040 psi	
	Cd=1.15 Cl=0.90 CF=0.95			
Shear Stress:	Fv = 290 psi		Fv' = 334 psi	
	Cd=1.15			
Modulus of Elasticity:	E = 2000 ksi		E' = 2000 ksi	
Comp. ⊥ to Grain:	Fc - ⊥ = 750 psi		Fc - ⊥' = 750 psi	

Controlling Moment: -10443 ft-lb
16.67 Ft from left support of span 1 (Left Span)
Created by combining all dead loads and live loads on span(s) 1, 2
Controlling Shear: -3461 lb
At a distance d from the right support of span 1 (Left Span)
Created by combining all dead loads and live loads on span(s) 1, 2

Comparisons with required sections:	Req'd	Provided
Section Modulus:	41.22 in3	94.5 in3
Area (Shear):	15.57 in2	31.5 in2
Moment of Inertia (deflection):	202.05 in4	850.5 in4
Moment:	-10443 ft-lb	23940 ft-lb
Shear:	-3461 lb	7004 lb

LOADING DIAGRAM

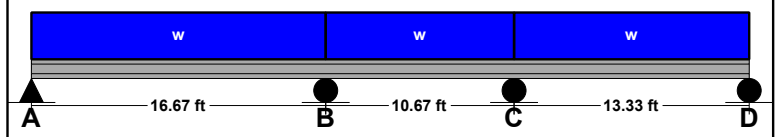

UNIFORM LOADS	Left		Center		Right	
Uniform Live Load	266	plf	266	plf	266	plf
Uniform Dead Load	131	plf	131	plf	131	plf
Beam Self Weight	8	plf	8	plf	8	plf
Total Uniform Load	405	plf	405	plf	405	plf

NOTES

PFS Corporation
Northeast Region
APPROVED
Michelle Floyd
01/22/2020
Approval limited to Factory Built Portion

Project: CC-633 Structural Calcs 01-15-2020 DAK

Location: Ceiling Girder CG1-1 ABCD - Uplift
Multi-Loaded Multi-Span Beam
[2015 International Residential Code(2015 NDS)]
1.75 IN x 18.0 IN x 40.67 FT (16.7 + 10.7 + 13.3)
2.0 Rigidlam LVL - Roseburg Forest Products
Section Adequate By: 594.5%
Controlling Factor: Shear

StruCalc 9.0
Glenco, Inc.
217 East Main Street
Middleburg, PA 17842

StruCalc Version 10.0.1.6 1/15/2020 3:36:44 PM

DEFLECTIONS	Left		Center		Right	
Live Load	-0.10	IN L/1978	0.03	IN L/4283	-0.05	IN L/3272
Dead Load	0.00	in	0.00	in	0.00	in
Total Load	-0.10	IN L/2075	0.03	IN L/4400	-0.05	IN L/3420

Live Load Deflection Criteria: L/240 Total Load Deflection Criteria: L/180

REACTIONS	A	B	C	D
Live Load	40 lb	238 lb	433 lb	60 lb
Dead Load	54 lb	127 lb	94 lb	45 lb
Total Load	94 lb	365 lb	527 lb	105 lb
Uplift (1.5 F.S)	**-1030 lb**	**-2557 lb**	**-2155 lb**	**-874 lb**
Bearing Length	0.07 in	0.28 in	0.40 in	0.08 in

BEAM DATA	Left	Center	Right
Span Length	16.67 ft	10.67 ft	13.33 ft
Unbraced Length-Top	2 ft	2 ft	2 ft
Unbraced Length-Bottom	2 ft	2 ft	2 ft
Live Load Duration Factor	1.60		
Notch Depth	0.00		

MATERIAL PROPERTIES

2.0 Rigidlam LVL - Roseburg Forest Products

	Base Values		Adjusted	
Bending Stress:	Fb = 3100 psi		Fb' = 3695 psi	
	Cd=1.60 Cl=0.78 CF=0.95			
Shear Stress:	Fv = 290 psi		Fv' = 464 psi	
	Cd=1.60			
Modulus of Elasticity:	E = 2000 ksi		E' = 2000 ksi	
Comp. ⊥ to Grain:	Fc - ⊥ = 750 psi		Fc - ⊥' = 750 psi	

Controlling Moment: 3782 ft-lb
16.67 Ft from left support of span 1 (Left Span)
Created by combining all dead loads and live loads on span(s) 1, 2
Controlling Shear: 1403 lb
17.0 Ft from left support of span 1 (Left Span)
Created by combining all dead loads and live loads on span(s) 1, 2

Comparisons with required sections:	Req'd	Provided
Section Modulus:	12.28 in3	94.5 in3
Area (Shear):	4.54 in2	31.5 in2
Moment of Inertia (deflection):	103.19 in4	850.5 in4
Moment:	3782 ft-lb	29100 ft-lb
Shear:	1403 lb	9744 lb

LOADING DIAGRAM

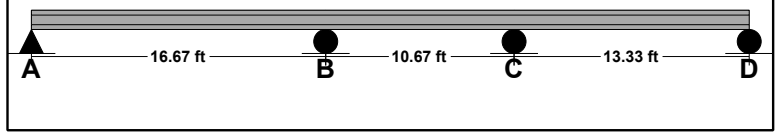

UNIFORM LOADS	Left	Center	Right
Uniform Live Load	-149 plf	-149 plf	-149 plf
Uniform Dead Load	0 plf	0 plf	0 plf
Beam Self Weight	8 plf	8 plf	8 plf
Total Uniform Load	-141 plf	-141 plf	-141 plf

NOTES

PFS Corporation
Northeast Region
APPROVED
Michelle Floyd
01/22/2020
Approval limited to Factory Built Portion

Project: CC-633 Structural Calcs 01-15-2020 DAK

Location: Ceiling Girder CG1-1 BCDE - Snow
Multi-Loaded Multi-Span Beam
[2015 International Residential Code(2015 NDS)]
1.75 IN x 18.0 IN x 39.33 FT (10.7 + 13.3 + 15.3)
2.0 Rigidlam LVL - Roseburg Forest Products
Section Adequate By: 119.9%
Controlling Factor: Shear

StruCalc 9.0
Glenco, Inc.
217 East Main Street
Middleburg, PA 17842

StruCalc Version 10.0.1.6 1/15/2020 3:36:45 PM

DEFLECTIONS	Left		Center		Right	
Live Load	0.04	IN L/3081	0.06	IN L/2819	0.13	IN L/1368
Dead Load	0.01	in	0.00	in	0.05	in
Total Load	0.05	IN L/2407	0.06	IN L/2701	0.19	IN L/976

Live Load Deflection Criteria: L/240 Total Load Deflection Criteria: L/180

REACTIONS	A	B	C	D
Live Load	1367 lb	3822 lb	4627 lb	1775 lb
Dead Load	582 lb	1711 lb	2315 lb	854 lb
Total Load	1949 lb	5533 lb	6942 lb	2629 lb
Bearing Length	1.48 in	4.22 in	5.29 in	2.00 in

BEAM DATA	Left	Center	Right
Span Length	10.67 ft	13.33 ft	15.33 ft
Unbraced Length-Top	2 ft	2 ft	2 ft
Unbraced Length-Bottom	2 ft	2 ft	2 ft
Live Load Duration Factor	1.15		
Notch Depth	0.00		

LOADING DIAGRAM

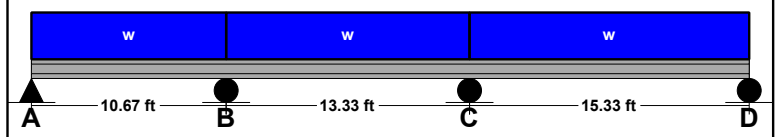

UNIFORM LOADS	Left	Center	Right
Uniform Live Load	266 plf	266 plf	266 plf
Uniform Dead Load	131 plf	131 plf	131 plf
Beam Self Weight	8 plf	8 plf	8 plf
Total Uniform Load	405 plf	405 plf	405 plf

MATERIAL PROPERTIES

2.0 Rigidlam LVL - Roseburg Forest Products

	Base Values		Adjusted	
Bending Stress:	Fb = 3100 psi		Fb' = 3040 psi	
	Cd=1.15 Cl=0.90 CF=0.95			
Shear Stress:	Fv = 290 psi		Fv' = 334 psi	
	Cd=1.15			
Modulus of Elasticity:	E = 2000 ksi		E' = 2000 ksi	
Comp. ⊥ to Grain:	Fc - ⊥ = 750 psi		Fc - ⊥' = 750 psi	

Controlling Moment: -9812 ft-lb
13.33 Ft from left support of span 2 (Center Span)
Created by combining all dead loads and live loads on span(s) 2, 3
Controlling Shear: 3185 lb
At a distance d from left support of span 3 (Right Span)
Created by combining all dead loads and live loads on span(s) 2, 3

Comparisons with required sections:	Req'd	Provided
Section Modulus:	38.73 in3	94.5 in3
Area (Shear):	14.32 in2	31.5 in2
Moment of Inertia (deflection):	156.86 in4	850.5 in4
Moment:	-9812 ft-lb	23940 ft-lb
Shear:	3185 lb	7004 lb

NOTES

PFS Corporation
Northeast Region
APPROVED
Michelle Floyd
01/22/2020
Approval limited to Factory Built Portion

Project: CC-633 Structural Calcs 01-15-2020 DAK

Location: Ceiling Girder CG1-1 BCDE - Uplift
Multi-Loaded Multi-Span Beam
[2015 International Residential Code(2015 NDS)]
1.75 IN x 18.0 IN x 39.33 FT (10.7 + 13.3 + 15.3)
2.0 Rigidlam LVL - Roseburg Forest Products
Section Adequate By: 643.5%
Controlling Factor: Shear

StruCalc 9.0
Glenco, Inc.
217 East Main Street
Middleburg, PA 17842

StruCalc Version 10.0.1.6 1/15/2020 3:36:45 PM

DEFLECTIONS	Left		Center		Right	
Live Load	-0.02	IN L/5501	-0.03	IN L/5033	-0.08	IN L/2443
Dead Load	0.00	in	0.00	in	0.00	in
Total Load	-0.02	IN L/5660	-0.03	IN L/5054	-0.07	IN L/2547

Live Load Deflection Criteria: L/240 Total Load Deflection Criteria: L/180

REACTIONS	A	B	C	D
Live Load	141 lb	305 lb	108 lb	78 lb
Dead Load	33 lb	97 lb	131 lb	48 lb
Total Load	174 lb	402 lb	239 lb	126 lb
Uplift (1.5 F.S)	**-744 lb**	**-2076 lb**	**-2504 lb**	**-962 lb**
Bearing Length	0.13 in	0.31 in	0.18 in	0.10 in

BEAM DATA	Left	Center	Right
Span Length	10.67 ft	13.33 ft	15.33 ft
Unbraced Length-Top	2 ft	2 ft	2 ft
Unbraced Length-Bottom	2 ft	2 ft	2 ft
Live Load Duration Factor	1.60		
Notch Depth	0.00		

LOADING DIAGRAM

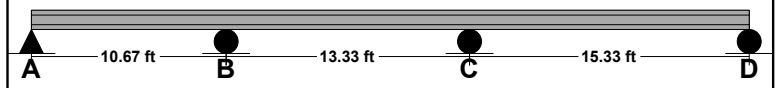

UNIFORM LOADS	Left	Center	Right
Uniform Live Load	-149 plf	-149 plf	-149 plf
Uniform Dead Load	0 plf	0 plf	0 plf
Beam Self Weight	8 plf	8 plf	8 plf
Total Uniform Load	-141 plf	-141 plf	-141 plf

MATERIAL PROPERTIES

2.0 Rigidlam LVL - Roseburg Forest Products

	Base Values		Adjusted	
Bending Stress:	Fb = 3100 psi		Fb' = 3695 psi	
	Cd=1.60 Cl=0.78 CF=0.95			
Shear Stress:	Fv = 290 psi		Fv' = 464 psi	
	Cd=1.60			
Modulus of Elasticity:	E = 2000 ksi		E' = 2000 ksi	
Comp. ⊥ to Grain:	Fc - ⊥ = 750 psi		Fc - ⊥' = 750 psi	

Controlling Moment: 3509 ft-lb
13.33 Ft from left support of span 2 (Center Span)
Created by combining all dead loads and live loads on span(s) 2, 3
Controlling Shear: -1311 lb
At left support of span 3 (Right Span)
Created by combining all dead loads and live loads on span(s) 2, 3

Comparisons with required sections:	Req'd	Provided
Section Modulus:	11.39 in3	94.5 in3
Area (Shear):	4.24 in2	31.5 in2
Moment of Inertia (deflection):	83.55 in4	850.5 in4
Moment:	3509 ft-lb	29100 ft-lb
Shear:	-1311 lb	9744 lb

NOTES

PFS Corporation
Northeast Region
APPROVED
Michelle Floyd
01/22/2020
Approval limited to Factory Built Portion

Project: CC-633 Structural Calcs 01-15-2020 DAK

Location: Column - CG1-1 Point A
Column
[2015 International Residential Code(2015 NDS)]
(2) 1.5 IN x 5.5 IN x 9.0 FT
#2 - Spruce-Pine-Fir - Dry Use
Section Adequate By: 72.5%

StruCalc 9.0
Glenco, Inc.
217 East Main Street
Middleburg, PA 17842

StruCalc Version 10.0.1.6 1/15/2020 3:36:45 PM

CAUTIONS
* Laminations to be nailed together per National Design Specifications for Wood Construction Section 15.3.3.1

DEFLECTIONS

Deflection due to lateral loads only:	Defl =	0.02	IN = L/6086
Live Load Deflection Criteria:			L/180

VERTICAL REACTIONS

Live Load:	Vert-LL-Rxn =	1904	lb
Dead Load:	Vert-DL-Rxn =	983	lb
Total Load:	Vert-TL-Rxn =	2887	lb

HORIZONTAL REACTIONS

Total Reaction at Top of Column:	TL-Rxn-Top =	32	lb
Total Reaction at Bottom of Column:	TL-Rxn-Bottom =	32	lb

COLUMN DATA

Total Column Length:	9	ft
Unbraced Length (X-Axis) Lx:	9	ft
Unbraced Length (Y-Axis) Ly:	4	ft
Column End Condition-K (e):	1	
Axial Load Duration Factor	1.15	
Lateral Load Duration Factor	1.00	

COLUMN PROPERTIES
#2 - Spruce-Pine-Fir

	Base Values	Adjusted
Compressive Stress:	Fc = 1150 psi	Fc' = 637 psi
	Cd=1.15 Cf=1.10 Cp=0.44	
Bending Stress (X-X Axis):	Fbx = 875 psi	Fbx' = 1308 psi
	Cd=1.15 CF=1.30	
Bending Stress (Y-Y Axis):	Fby = 875 psi	Fby' = 1308 psi
	Cd=1.15 CF=1.30	
Modulus of Elasticity:	E = 1400 ksi	E' = 1400 ksi

Column Section (X-X Axis):	dx =	5.5	in
Column Section (Y-Y Axis):	dy =	3	in
Area:	A =	16.5	in2
Section Modulus (X-X Axis):	Sx =	15.13	in3
Section Modulus (Y-Y Axis):	Sy =	4.13	in3
Slenderness Ratio:	Lex/dx =	19.64	
	Ley/dy =	16	

Column Calculations (Controlling Case Only):
Controlling Load Case: Axial Total Load Only (L + D)

Actual Compressive Stress:	Fc =	175	psi
Allowable Compressive Stress:	Fc' =	637	psi
Eccentricity Moment (X-X Axis):	Mx-ex =	0	ft-lb
Eccentricity Moment (Y-Y Axis):	My-ey =	0	ft-lb
Moment Due to Lateral Loads (X-X Axis):	Mx =	0	ft-lb
Moment Due to Lateral Loads (Y-Y Axis):	My =	0	ft-lb
Bending Stress Lateral Loads Only (X-X Axis):	Fbx =	0	psi
Allowable Bending Stress (X-X Axis):	Fbx' =	1308	psi
Bending Stress Lateral Loads Only (Y-Y Axis):	Fby =	0	psi
Allowable Bending Stress (Y-Y Axis):	Fby' =	1308	psi
Combined Stress Factor:	**CSF =**	**0.27**	

LOADING DIAGRAM

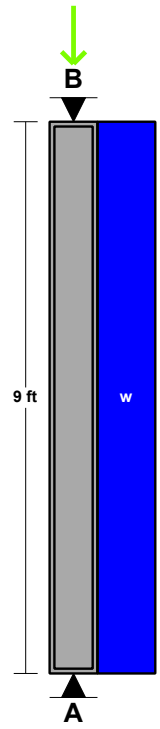

AXIAL LOADING

Live Load:	PL =	1904	lb *
Dead Load:	PD =	956	lb *
Column Self Weight:	CSW =	27	lb
Total Axial Load:	PT =	2887	lb

* Load obtained from Load Tracker. See Summary Report for details.

LATERAL LOADING (Dy Face)

Uniform Lateral Load:	wL-Lat =	7	plf

PFS Corporation
Northeast Region
APPROVED
Michelle Floyd
01/22/2020
Approval limited to Factory Built Portion

NOTES

Project: CC-633 Structural Calcs 01-15-2020 DAK

Location: Column - CG1-1 Point B
Column
[2015 International Residential Code(2015 NDS)]
3.5 IN x 7.25 IN x 9 FT
2.0 Rigidlam LVL - Roseburg Forest Products
Section Adequate By: 67.5%

StruCalc 9.0
Glenco, Inc.
217 East Main Street
Middleburg, PA 17842

StruCalc Version 10.0.1.6 1/15/2020 3:36:45 PM

DEFLECTIONS

Deflection due to lateral loads only:	Defl = 0	IN = L/MAX
Live Load Deflection Criteria:		L/180

VERTICAL REACTIONS

Live Load:	Vert-LL-Rxn =	4716	lb
Dead Load:	Vert-DL-Rxn =	2298	lb
Total Load:	Vert-TL-Rxn =	7014	lb

HORIZONTAL REACTIONS

Total Reaction at Top of Column:	TL-Rxn-Top =	32	lb
Total Reaction at Bottom of Column:	TL-Rxn-Bottom =	32	lb

COLUMN DATA

Total Column Length:	9	ft
Unbraced Length (X-Axis) Lx:	9	ft
Unbraced Length (Y-Axis) Ly:	9	ft
Column End Condition-K (e):	1	
Axial Load Duration Factor	1.15	
Lateral Load Duration Factor	1.00	

COLUMN PROPERTIES

2.0 Rigidlam LVL - Roseburg Forest Products

	Base Values	Adjusted
Compressive Stress:	Fc = 3000 psi	Fc' = 850 psi
	Cd=1.15 Cp=0.25	
Bending Stress (X-X Axis):	Fbx = 3100 psi	Fbx' = 3797 psi
	Cd=1.15 CF=1.07	
Bending Stress (Y-Y Axis):	Fby = 3100 psi	Fby' = 3797 psi
	Cd=1.15 CF=1.07	
Modulus of Elasticity:	E = 2000 ksi	E' = 2000 ksi

Column Section (X-X Axis):	dx =	7.25	in
Column Section (Y-Y Axis):	dy =	3.5	in
Area:	A =	25.38	in2
Section Modulus (X-X Axis):	Sx =	30.66	in3
Section Modulus (Y-Y Axis):	Sy =	14.8	in3
Slenderness Ratio:	Lex/dx =	14.9	
	Ley/dy =	30.86	

Column Calculations (Controlling Case Only):
Controlling Load Case: Axial Total Load Only (L + D)

Actual Compressive Stress:	Fc =	276	psi
Allowable Compressive Stress:	Fc' =	850	psi
Eccentricity Moment (X-X Axis):	Mx-ex =	0	ft-lb
Eccentricity Moment (Y-Y Axis):	My-ey =	0	ft-lb
Moment Due to Lateral Loads (X-X Axis):	Mx =	0	ft-lb
Moment Due to Lateral Loads (Y-Y Axis):	My =	0	ft-lb
Bending Stress Lateral Loads Only (X-X Axis):	Fbx =	0	psi
Allowable Bending Stress (X-X Axis):	Fbx' =	3797	psi
Bending Stress Lateral Loads Only (Y-Y Axis):	Fby =	0	psi
Allowable Bending Stress (Y-Y Axis):	Fby' =	3797	psi
Combined Stress Factor:	**CSF =**	**0.33**	

LOADING DIAGRAM

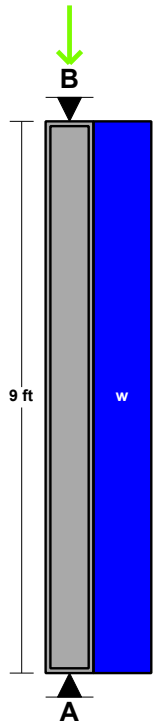

AXIAL LOADING

Live Load:	PL =	4716	lb *
Dead Load:	PD =	2241	lb *
Column Self Weight:	CSW =	57	lb
Total Axial Load:	PT =	7014	lb

* Load obtained from Load Tracker. See Summary Report for details.

LATERAL LOADING (Dy Face)

Uniform Lateral Load:	wL-Lat =	7	plf

PFS Corporation
Northeast Region
APPROVED
Michelle Floyd
01/22/2020
Approval limited to Factory Built Portion

NOTES

Project: CC-633 Structural Calcs 01-15-2020 DAK

Location: Column - CG1-1 Point C
Column
[2015 International Residential Code(2015 NDS)]
3.5 IN x 5.5 IN x 9 FT
2.0 Rigidlam LVL - Roseburg Forest Products
Section Adequate By: 65.4%

StruCalc 9.0
Glenco, Inc.
217 East Main Street
Middleburg, PA 17842

StruCalc Version 10.0.1.6 1/15/2020 3:36:46 PM

DEFLECTIONS

Deflection due to lateral loads only:	Defl = 0.01	IN = L/MAX
Live Load Deflection Criteria:		L/180

VERTICAL REACTIONS

Live Load:	Vert-LL-Rxn =	3960	lb
Dead Load:	Vert-DL-Rxn =	1707	lb
Total Load:	Vert-TL-Rxn =	5667	lb

HORIZONTAL REACTIONS

Total Reaction at Top of Column:	TL-Rxn-Top =	32	lb
Total Reaction at Bottom of Column:	TL-Rxn-Bottom =	32	lb

COLUMN DATA

Total Column Length:	9	ft
Unbraced Length (X-Axis) Lx:	9	ft
Unbraced Length (Y-Axis) Ly:	9	ft
Column End Condition-K (e):	1	
Axial Load Duration Factor	1.15	
Lateral Load Duration Factor	1.00	

COLUMN PROPERTIES

2.0 Rigidlam LVL - Roseburg Forest Products

	Base Values	Adjusted
Compressive Stress:	Fc = 3000 psi	Fc' = 850 psi
	Cd=1.15 Cp=0.25	
Bending Stress (X-X Axis):	Fbx = 3100 psi	Fbx' = 3930 psi
	Cd=1.15 CF=1.10	
Bending Stress (Y-Y Axis):	Fby = 3100 psi	Fby' = 3930 psi
	Cd=1.15 CF=1.10	
Modulus of Elasticity:	E = 2000 ksi	E' = 2000 ksi

Column Section (X-X Axis):	dx =	5.5	in
Column Section (Y-Y Axis):	dy =	3.5	in
Area:	A =	19.25	in2
Section Modulus (X-X Axis):	Sx =	17.65	in3
Section Modulus (Y-Y Axis):	Sy =	11.23	in3
Slenderness Ratio:	Lex/dx =	19.64	
	Ley/dy =	30.86	

Column Calculations (Controlling Case Only):
Controlling Load Case: Axial Total Load Only (L + D)

Actual Compressive Stress:	Fc =	294	psi
Allowable Compressive Stress:	Fc' =	850	psi
Eccentricity Moment (X-X Axis):	Mx-ex =	0	ft-lb
Eccentricity Moment (Y-Y Axis):	My-ey =	0	ft-lb
Moment Due to Lateral Loads (X-X Axis):	Mx =	0	ft-lb
Moment Due to Lateral Loads (Y-Y Axis):	My =	0	ft-lb
Bending Stress Lateral Loads Only (X-X Axis):	Fbx =	0	psi
Allowable Bending Stress (X-X Axis):	Fbx' =	3930	psi
Bending Stress Lateral Loads Only (Y-Y Axis):	Fby =	0	psi
Allowable Bending Stress (Y-Y Axis):	Fby' =	3930	psi
Combined Stress Factor:	**CSF =**	**0.35**	

LOADING DIAGRAM

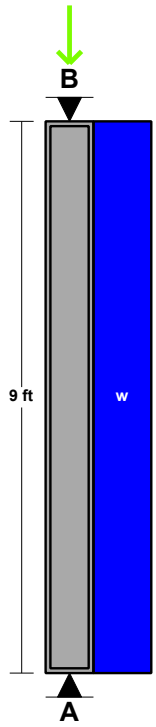

AXIAL LOADING

Live Load:	PL =	3960	lb *
Dead Load:	PD =	1664	lb *
Column Self Weight:	CSW =	43	lb
Total Axial Load:	PT =	5667	lb

* Load obtained from Load Tracker. See Summary Report for details.

LATERAL LOADING (Dy Face)

Uniform Lateral Load:	wL-Lat =	7	plf

PFS Corporation
Northeast Region
APPROVED
Michelle Floyd
01/22/2020
Approval limited to Factory Built Portion

NOTES

Project: CC-633 Structural Calcs 01-15-2020 DAK

Location: Column - CG1-1 Point D
Column
[2015 International Residential Code(2015 NDS)]
3.5 IN x 7.25 IN x 9 FT
2.0 Rigidlam LVL - Roseburg Forest Products
Section Adequate By: 67.6%

StruCalc 9.0
Glenco, Inc.
217 East Main Street
Middleburg, PA 17842

StruCalc Version 10.0.1.6 1/15/2020 3:36:46 PM

DEFLECTIONS

Deflection due to lateral loads only:	Defl = 0	IN = L/MAX
Live Load Deflection Criteria:		L/180

VERTICAL REACTIONS

Live Load:	Vert-LL-Rxn =	4627	lb
Dead Load:	Vert-DL-Rxn =	2372	lb
Total Load:	Vert-TL-Rxn =	6999	lb

HORIZONTAL REACTIONS

Total Reaction at Top of Column:	TL-Rxn-Top =	32	lb
Total Reaction at Bottom of Column:	TL-Rxn-Bottom =	32	lb

COLUMN DATA

Total Column Length:	9	ft
Unbraced Length (X-Axis) Lx:	9	ft
Unbraced Length (Y-Axis) Ly:	9	ft
Column End Condition-K (e):	1	
Axial Load Duration Factor	1.15	
Lateral Load Duration Factor	1.00	

COLUMN PROPERTIES

2.0 Rigidlam LVL - Roseburg Forest Products

	Base Values	Adjusted
Compressive Stress:	Fc = 3000 psi	Fc' = 850 psi
	Cd=1.15 Cp=0.25	
Bending Stress (X-X Axis):	Fbx = 3100 psi	Fbx' = 3797 psi
	Cd=1.15 CF=1.07	
Bending Stress (Y-Y Axis):	Fby = 3100 psi	Fby' = 3797 psi
	Cd=1.15 CF=1.07	
Modulus of Elasticity:	E = 2000 ksi	E' = 2000 ksi

Column Section (X-X Axis):	dx =	7.25	in
Column Section (Y-Y Axis):	dy =	3.5	in
Area:	A =	25.38	in2
Section Modulus (X-X Axis):	Sx =	30.66	in3
Section Modulus (Y-Y Axis):	Sy =	14.8	in3
Slenderness Ratio:	Lex/dx =	14.9	
	Ley/dy =	30.86	

Column Calculations (Controlling Case Only):
Controlling Load Case: Axial Total Load Only (L + D)

Actual Compressive Stress:	Fc =	276	psi
Allowable Compressive Stress:	Fc' =	850	psi
Eccentricity Moment (X-X Axis):	Mx-ex =	0	ft-lb
Eccentricity Moment (Y-Y Axis):	My-ey =	0	ft-lb
Moment Due to Lateral Loads (X-X Axis):	Mx =	0	ft-lb
Moment Due to Lateral Loads (Y-Y Axis):	My =	0	ft-lb
Bending Stress Lateral Loads Only (X-X Axis):	Fbx =	0	psi
Allowable Bending Stress (X-X Axis):	Fbx' =	3797	psi
Bending Stress Lateral Loads Only (Y-Y Axis):	Fby =	0	psi
Allowable Bending Stress (Y-Y Axis):	Fby' =	3797	psi
Combined Stress Factor:	**CSF =**	**0.32**	

LOADING DIAGRAM

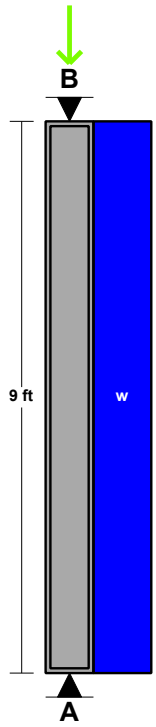

AXIAL LOADING

Live Load:	PL =	4627	lb *
Dead Load:	PD =	2315	lb *
Column Self Weight:	CSW =	57	lb
Total Axial Load:	PT =	6999	lb

* Load obtained from Load Tracker. See Summary Report for details.

LATERAL LOADING (Dy Face)

Uniform Lateral Load: wL-Lat = 7 plf

PFS Corporation
Northeast Region
APPROVED
Michelle Floyd
01/22/2020
Approval limited to Factory Built Portion

NOTES

Project: CC-633 Structural Calcs 01-15-2020 DAK

Location: Column - CG1-1 Point E
Column
[2015 International Residential Code(2015 NDS)]
(2) 1.5 IN x 5.5 IN x 9.0 FT
#2 - Spruce-Pine-Fir - Dry Use
Section Adequate By: 74.7%

StruCalc 9.0
Glenco, Inc.
217 East Main Street
Middleburg, PA 17842

StruCalc Version 10.0.1.6 1/15/2020 3:36:46 PM

CAUTIONS
* Laminations to be nailed together per National Design Specifications for Wood Construction Section 15.3.3.1

DEFLECTIONS

Deflection due to lateral loads only:	Defl = 0.02	IN = L/6086
Live Load Deflection Criteria:		L/180

VERTICAL REACTIONS

Live Load:	Vert-LL-Rxn =	1775	lb
Dead Load:	Vert-DL-Rxn =	881	lb
Total Load:	Vert-TL-Rxn =	2656	lb

HORIZONTAL REACTIONS

Total Reaction at Top of Column:	TL-Rxn-Top =	32	lb
Total Reaction at Bottom of Column:	TL-Rxn-Bottom =	32	lb

COLUMN DATA

Total Column Length:	9	ft
Unbraced Length (X-Axis) Lx:	9	ft
Unbraced Length (Y-Axis) Ly:	4	ft
Column End Condition-K (e):	1	
Axial Load Duration Factor	1.15	
Lateral Load Duration Factor	1.00	

COLUMN PROPERTIES
#2 - Spruce-Pine-Fir

	Base Values	Adjusted
Compressive Stress:	Fc = 1150 psi	Fc' = 637 psi
	Cd=1.15 Cf=1.10 Cp=0.44	
Bending Stress (X-X Axis):	Fbx = 875 psi	Fbx' = 1308 psi
	Cd=1.15 CF=1.30	
Bending Stress (Y-Y Axis):	Fby = 875 psi	Fby' = 1308 psi
	Cd=1.15 CF=1.30	
Modulus of Elasticity:	E = 1400 ksi	E' = 1400 ksi

Column Section (X-X Axis):	dx =	5.5	in
Column Section (Y-Y Axis):	dy =	3	in
Area:	A =	16.5	in2
Section Modulus (X-X Axis):	Sx =	15.13	in3
Section Modulus (Y-Y Axis):	Sy =	4.13	in3
Slenderness Ratio:	Lex/dx =	19.64	
	Ley/dy =	16	

Column Calculations (Controlling Case Only):
Controlling Load Case: Axial Total Load Only (L + D)

Actual Compressive Stress:	Fc =	161	psi
Allowable Compressive Stress:	Fc' =	637	psi
Eccentricity Moment (X-X Axis):	Mx-ex =	0	ft-lb
Eccentricity Moment (Y-Y Axis):	My-ey =	0	ft-lb
Moment Due to Lateral Loads (X-X Axis):	Mx =	0	ft-lb
Moment Due to Lateral Loads (Y-Y Axis):	My =	0	ft-lb
Bending Stress Lateral Loads Only (X-X Axis):	Fbx =	0	psi
Allowable Bending Stress (X-X Axis):	Fbx' =	1308	psi
Bending Stress Lateral Loads Only (Y-Y Axis):	Fby =	0	psi
Allowable Bending Stress (Y-Y Axis):	Fby' =	1308	psi
Combined Stress Factor:	**CSF =**	**0.25**	

LOADING DIAGRAM

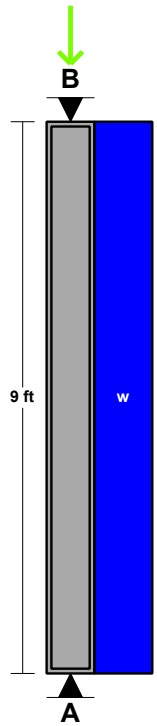

AXIAL LOADING

Live Load:	PL =	1775	lb *
Dead Load:	PD =	854	lb *
Column Self Weight:	CSW =	27	lb
Total Axial Load:	PT =	2656	lb

* Load obtained from Load Tracker. See Summary Report for details.

LATERAL LOADING (Dy Face)
Uniform Lateral Load: wL-Lat = 7 plf

PFS Corporation
Northeast Region
APPROVED
Michelle Floyd
01/22/2020
Approval limited to
Factory Built Portion

NOTES

Project: CC-633 Structural Calcs 01-15-2020 DAK

Location: Floor Girder - Floor Load Only
Multi-Loaded Multi-Span Beam
[2015 International Residential Code(2015 NDS)]
(2) 1.5 IN x 9.25 IN x 7.5 FT
#2 - Spruce-Pine-Fir - Dry Use
Section Adequate By: 28.1%
Controlling Factor: Moment

StruCalc 9.0
Glenco, Inc.
217 East Main Street
Middleburg, PA 17842

StruCalc Version 10.0.1.6 1/15/2020 3:36:47 PM

CAUTIONS
* Laminations are to be fully connected to provide uniform transfer of loads to all members

DEFLECTIONS	Center	
Live Load	0.08	IN L/1167
Dead Load	0.02	in
Total Load	0.10	IN L/922

Live Load Deflection Criteria: L/360 Total Load Deflection Criteria: L/240

REACTIONS	A		B	
Live Load	1125	lb	1125	lb
Dead Load	300	lb	300	lb
Total Load	1425	lb	1425	lb
Bearing Length	1.12	in	1.12	in

BEAM DATA	Center	
Span Length	7.5	ft
Unbraced Length-Top	1.33	ft
Unbraced Length-Bottom	1.33	ft
Live Load Duration Factor	1.00	
Notch Depth	0.00	

LOADING DIAGRAM

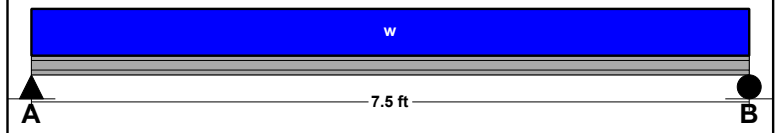

UNIFORM LOADS	Center	
Uniform Live Load	300	plf
Uniform Dead Load	75	plf
Beam Self Weight	5	plf
Total Uniform Load	380	plf

MATERIAL PROPERTIES
#2 - Spruce-Pine-Fir

	Base Values		Adjusted	
Bending Stress:	Fb = 875	psi	Fb' = 960	psi
	Cd=1.00 Cl=1.00 CF=1.10			
Shear Stress:	Fv = 135	psi	Fv' = 135	psi
	Cd=1.00			
Modulus of Elasticity:	E = 1400	ksi	E' = 1400	ksi
Comp. ⊥ to Grain:	Fc - ⊥ = 425	psi	Fc - ⊥' = 425	psi

Controlling Moment: 2672 ft-lb
3.75 Ft from left support of span 2 (Center Span)
Created by combining all dead loads and live loads on span(s) 2
Controlling Shear: -1140 lb
At a distance d from right support of span 2 (Center Span)
Created by combining all dead loads and live loads on span(s) 2

Comparisons with required sections:	Req'd	Provided
Section Modulus:	33.41 in3	42.78 in3
Area (Shear):	12.67 in2	27.75 in2
Moment of Inertia (deflection):	61.01 in4	197.86 in4
Moment:	2672 ft-lb	3422 ft-lb
Shear:	-1140 lb	2498 lb

NOTES

PFS Corporation
Northeast Region
APPROVED
Michelle Floyd
01/22/2020
Approval limited to Factory Built Portion

Project: CC-633 Structural Calcs 01-15-2020 DAK

Location: Header - Ext wall up to 6/0 opg
Multi-Loaded Multi-Span Beam
[2015 International Residential Code(2015 NDS)]
(3) 1.5 IN x 5.5 IN x 6.25 FT
#2 - Spruce-Pine-Fir - Dry Use
Section Adequate By: 21.2%
Controlling Factor: Moment

StruCalc 9.0
Glenco, Inc.
217 East Main Street
Middleburg, PA 17842

StruCalc Version 10.0.1.6 1/15/2020 3:36:47 PM

DEFLECTIONS	Center	
Live Load	0.13	IN L/598
Dead Load	0.06	in
Total Load	0.19	IN L/397

Live Load Deflection Criteria: L/240 Total Load Deflection Criteria: L/180

REACTIONS	A		B	
Live Load	997	lb	997	lb
Dead Load	505	lb	505	lb
Total Load	1502	lb	1502	lb
Bearing Length	0.79	in	0.79	in

BEAM DATA	Center	
Span Length	6.25	ft
Unbraced Length-Top	0	ft
Unbraced Length-Bottom	6.25	ft
Live Load Duration Factor	1.15	
Notch Depth	0.00	

MATERIAL PROPERTIES
#2 - Spruce-Pine-Fir

	Base Values		Adjusted	
Bending Stress:	Fb = 875	psi	Fb' = 1504	psi
	Cd=1.15 CF=1.30 Cr=1.15			
Shear Stress:	Fv = 135	psi	Fv' = 155	psi
	Cd=1.15			
Modulus of Elasticity:	E = 1400	ksi	E' = 1400	ksi
Comp. ⊥ to Grain:	Fc - ⊥ = 425	psi	Fc - ⊥' = 425	psi

Controlling Moment: 2346 ft-lb
3.12 Ft from left support of span 2 (Center Span)
Created by combining all dead loads and live loads on span(s) 2
Controlling Shear: 1291 lb
At a distance d from left support of span 2 (Center Span)
Created by combining all dead loads and live loads on span(s) 2

Comparisons with required sections:	Req'd		Provided	
Section Modulus:	18.72	in3	22.69	in3
Area (Shear):	12.48	in2	24.75	in2
Moment of Inertia (deflection):	28.28	in4	62.39	in4
Moment:	2346	ft-lb	2844	ft-lb
Shear:	1291	lb	2562	lb

LOADING DIAGRAM

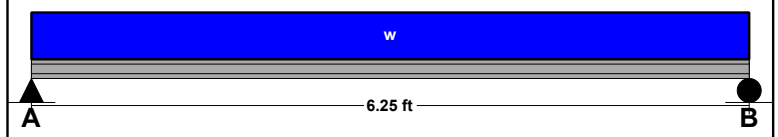

UNIFORM LOADS	Center	
Uniform Live Load	319	plf
Uniform Dead Load	157	plf
Beam Self Weight	5	plf
Total Uniform Load	481	plf

NOTES

PFS Corporation
Northeast Region
APPROVED
Michelle Floyd
01/22/2020
Approval limited to Factory Built Portion

Project: CC-633 Structural Calcs 01-15-2020 DAK

Location: Header - H1-1
Multi-Loaded Multi-Span Beam
[2015 International Residential Code(2015 NDS)]
(3) 1.5 IN x 7.25 IN x 7.75 FT
#2 - Spruce-Pine-Fir - Dry Use
Section Adequate By: 153.2%
Controlling Factor: Moment

StruCalc 9.0
Glenco, Inc.
217 East Main Street
Middleburg, PA 17842

StruCalc Version 10.0.1.6 1/17/2020 7:41:19 AM

CAUTIONS
* Laminations are to be fully connected to provide uniform transfer of loads to all members

DEFLECTIONS	Center	
Live Load	0.06	IN L/1460
Dead Load	0.03	in
Total Load	0.10	IN L/956

Live Load Deflection Criteria: L/240 Total Load Deflection Criteria: L/180

REACTIONS	A		B	
Live Load	608	lb	608	lb
Dead Load	321	lb	321	lb
Total Load	929	lb	929	lb
Bearing Length	0.49	in	0.49	in

BEAM DATA	Center	
Span Length	7.75	ft
Unbraced Length-Top	0	ft
Unbraced Length-Bottom	7.75	ft
Live Load Duration Factor	1.15	
Notch Depth	0.00	

LOADING DIAGRAM

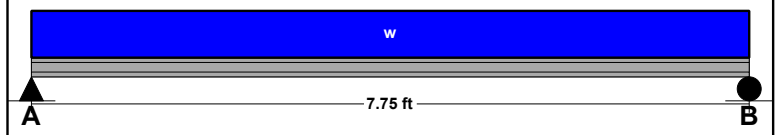

UNIFORM LOADS	Center	
Uniform Live Load	157	plf
Uniform Dead Load	77	plf
Beam Self Weight	6	plf
Total Uniform Load	240	plf

MATERIAL PROPERTIES
#2 - Spruce-Pine-Fir

	Base Values		Adjusted	
Bending Stress:	Fb = 875	psi	Fb' = 1389	psi
	Cd=1.15 CF=1.20 Cr=1.15			
Shear Stress:	Fv = 135	psi	Fv' = 155	psi
	Cd=1.15			
Modulus of Elasticity:	E = 1400	ksi	E' = 1400	ksi
Comp. ⊥ to Grain:	Fc - ⊥ = 425	psi	Fc - ⊥' = 425	psi

Controlling Moment: 1801 ft-lb
3.88 Ft from left support of span 2 (Center Span)
Created by combining all dead loads and live loads on span(s) 2
Controlling Shear: -800 lb
At a distance d from right support of span 2 (Center Span)
Created by combining all dead loads and live loads on span(s) 2

Comparisons with required sections:	Req'd	Provided
Section Modulus:	15.57 in3	39.42 in3
Area (Shear):	7.73 in2	32.63 in2
Moment of Inertia (deflection):	26.92 in4	142.9 in4
Moment:	1801 ft-lb	4562 ft-lb
Shear:	-800 lb	3377 lb

NOTES

PFS Corporation
Northeast Region
APPROVED
Michelle Floyd
01/22/2020
Approval limited to Factory Built Portion

Project: CC-633 Structural Calcs 01-15-2020 DAK

Location: Header - H1-1 - Uplift
Multi-Loaded Multi-Span Beam
[2015 International Residential Code(2015 NDS)]
(3) 1.5 IN x 7.25 IN x 7.75 FT
#2 - Spruce-Pine-Fir - Dry Use
Section Adequate By: 2709.6%
Controlling Factor: Deflection

StruCalc 9.0
Glenco, Inc.
217 East Main Street
Middleburg, PA 17842

StruCalc Version 10.0.1.6 1/17/2020 7:41:19 AM

CAUTIONS
* Laminations are to be fully connected to provide uniform transfer of loads to all members

DEFLECTIONS	Center	
Live Load	-0.01	IN L/6743
Dead Load	0.00	in
Total Load	-0.01	IN L/8171

Live Load Deflection Criteria: L/240 Total Load Deflection Criteria: L/180

REACTIONS	A		B	
Live Load	-132	lb	-132	lb
Dead Load	23	lb	23	lb
Total Load	-109	lb	-109	lb
Uplift (1.5 F.S)	**-116**	**lb**	**-116**	**lb**
Bearing Length	0.01	in	0.01	in

BEAM DATA	Center	
Span Length	7.75	ft
Unbraced Length-Top	0	ft
Unbraced Length-Bottom	7.75	ft
Live Load Duration Factor	1.60	
Notch Depth	0.00	

LOADING DIAGRAM

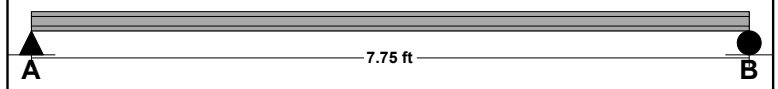

UNIFORM LOADS	Center	
Uniform Live Load	-34	plf
Uniform Dead Load	0	plf
Beam Self Weight	6	plf
Total Uniform Load	-28	plf

MATERIAL PROPERTIES
#2 - Spruce-Pine-Fir

	Base Values		Adjusted	
Bending Stress:	Fb = 875	psi	Fb' = 1909	psi
	Cd=1.60 Cl=0.99 CF=1.20 Cr=1.15			
Shear Stress:	Fv = 135	psi	Fv' = 216	psi
	Cd=1.60			
Modulus of Elasticity:	E = 1400	ksi	E' = 1400	ksi
Comp. ⊥ to Grain:	Fc - ⊥ = 425	psi	Fc - ⊥' = 425	psi

Controlling Moment: -211 ft-lb
3.88 Ft from left support of span 2 (Center Span)
Created by combining all dead loads and live loads on span(s) 2
Controlling Shear: 109 lb
8.0 Ft from left support of span 2 (Center Span)
Created by combining all dead loads and live loads on span(s) 2

Comparisons with required sections:	Req'd	Provided
Section Modulus:	1.32 in3	39.42 in3
Area (Shear):	0.76 in2	32.63 in2
Moment of Inertia (deflection):	5.09 in4	142.9 in4
Moment:	-211 ft-lb	6272 ft-lb
Shear:	109 lb	4698 lb

NOTES

PFS Corporation
Northeast Region
APPROVED
Michelle Floyd
01/22/2020
Approval limited to Factory Built Portion

Project: CC-633 Structural Calcs 01-15-2020 DAK

Location: Header - H1-2
Multi-Loaded Multi-Span Beam
[2015 International Residential Code(2015 NDS)]
(3) 1.5 IN x 4.5 IN x 3.44 FT
#3 - Spruce-Pine-Fir - Dry Use
Section Adequate By: 65.1%
Controlling Factor: Moment

StruCalc 9.0
Glenco, Inc.
217 East Main Street
Middleburg, PA 17842

StruCalc Version 10.0.1.6 1/15/2020 3:36:48 PM

DEFLECTIONS Center

Live Load	0.02	IN L/1684
Dead Load	0.01	in
Total Load	0.04	IN L/1120

Live Load Deflection Criteria: L/240 Total Load Deflection Criteria: L/180

REACTIONS A B

Live Load	549	lb	549	lb
Dead Load	276	lb	276	lb
Total Load	825	lb	825	lb
Bearing Length	0.43	in	0.43	in

BEAM DATA Center

Span Length	3.44	ft
Unbraced Length-Top	0	ft
Unbraced Length-Bottom	3.44	ft
Live Load Duration Factor	1.15	
Notch Depth	0.00	

MATERIAL PROPERTIES
#3 - Spruce-Pine-Fir

	Base Values		Adjusted	
Bending Stress:	Fb = 500	psi	Fb' = 926	psi
	Cd=1.15 CF=1.40 Cr=1.15			
Shear Stress:	Fv = 135	psi	Fv' = 155	psi
	Cd=1.15			
Modulus of Elasticity:	E = 1200	ksi	E' = 1200	ksi
Comp. ⊥ to Grain:	Fc - ⊥ = 425	psi	Fc - ⊥' = 425	psi

Controlling Moment: 710 ft-lb
1.72 Ft from left support of span 2 (Center Span)
Created by combining all dead loads and live loads on span(s) 2
Controlling Shear: 660 lb
At a distance d from left support of span 2 (Center Span)
Created by combining all dead loads and live loads on span(s) 2

Comparisons with required sections:	Req'd	Provided
Section Modulus:	9.2 in3	15.19 in3
Area (Shear):	6.38 in2	20.25 in2
Moment of Inertia (deflection):	5.49 in4	34.17 in4
Moment:	710 ft-lb	1172 ft-lb
Shear:	660 lb	2096 lb

LOADING DIAGRAM

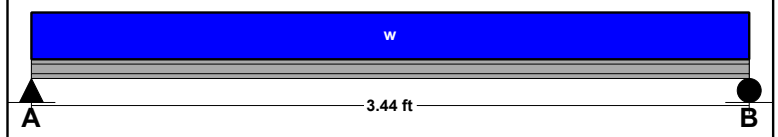

UNIFORM LOADS Center

Uniform Live Load	319	plf
Uniform Dead Load	157	plf
Beam Self Weight	4	plf
Total Uniform Load	480	plf

NOTES

PFS Corporation
Northeast Region
APPROVED
Michelle Floyd
01/22/2020
Approval limited to Factory Built Portion

Project: CC-633 Structural Calcs 01-15-2020 DAK

Location: Header - H1-2 - Uplift
Multi-Loaded Multi-Span Beam
[2015 International Residential Code(2015 NDS)]
(3) 1.5 IN x 4.5 IN x 3.44 FT
#3 - Spruce-Pine-Fir - Dry Use
Section Adequate By: 1636.6%
Controlling Factor: Moment

StruCalc 9.0
Glenco, Inc.
217 East Main Street
Middleburg, PA 17842

StruCalc Version 10.0.1.6 1/15/2020 3:36:48 PM

DEFLECTIONS

	Center	
Live Load	-0.01	IN L/8020
Dead Load	0.00	in
Total Load	0.00	IN L/8487

Live Load Deflection Criteria: L/240 Total Load Deflection Criteria: L/180

REACTIONS

	A		B	
Live Load	-115	lb	-115	lb
Dead Load	6	lb	6	lb
Total Load	-109	lb	-109	lb
Uplift (1.5 F.S)	**-111**	**lb**	**-111**	**lb**
Bearing Length	0.00	in	0.00	in

BEAM DATA

	Center	
Span Length	3.44	ft
Unbraced Length-Top	0	ft
Unbraced Length-Bottom	3.44	ft
Live Load Duration Factor	1.60	
Notch Depth	0.00	

MATERIAL PROPERTIES

#3 - Spruce-Pine-Fir

	Base Values		Adjusted	
Bending Stress:	Fb = 500	psi	Fb' = 1285	psi
	Cd=1.60 Cl=1.00 CF=1.40 Cr=1.15			
Shear Stress:	Fv = 135	psi	Fv' = 216	psi
	Cd=1.60			
Modulus of Elasticity:	E = 1200	ksi	E' = 1200	ksi
Comp. ⊥ to Grain:	Fc - ⊥ = 425	psi	Fc - ⊥' = 425	psi

Controlling Moment: -94 ft-lb
1.72 Ft from left support of span 2 (Center Span)
Created by combining all dead loads and live loads on span(s) 2
Controlling Shear: -109 lb
At left support of span 2 (Center Span)
Created by combining all dead loads and live loads on span(s) 2

Comparisons with required sections:	Req'd	Provided
Section Modulus:	0.87 in3	15.19 in3
Area (Shear):	0.76 in2	20.25 in2
Moment of Inertia (deflection):	1.02 in4	34.17 in4
Moment:	-94 ft-lb	1626 ft-lb
Shear:	-109 lb	2916 lb

LOADING DIAGRAM

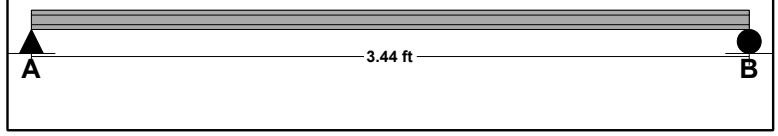

UNIFORM LOADS

	Center	
Uniform Live Load	-67	plf
Uniform Dead Load	0	plf
Beam Self Weight	4	plf
Total Uniform Load	-63	plf

NOTES

PFS Corporation
Northeast Region
APPROVED
Michelle Floyd
01/22/2020
Approval limited to Factory Built Portion

Project: CC-633 Structural Calcs 01-15-2020 DAK

Location: Header - H1-3
Multi-Loaded Multi-Span Beam
[2015 International Residential Code(2015 NDS)]
(3) 1.5 IN x 5.5 IN x 2.92 FT
#2 - Spruce-Pine-Fir - Dry Use
Section Adequate By: 74.3%
Controlling Factor: Moment

StruCalc 9.0
Glenco, Inc.
217 East Main Street
Middleburg, PA 17842

StruCalc Version 10.0.1.6 1/15/2020 3:36:48 PM

DEFLECTIONS Center

Live Load	0.02	IN L/2183
Dead Load	0.01	in
Total Load	0.02	IN L/1457

Live Load Deflection Criteria: L/240 Total Load Deflection Criteria: L/180

REACTIONS

	A		B	
Live Load	939	lb	827	lb
Dead Load	470	lb	414	lb
Total Load	1409	lb	1241	lb
Bearing Length	0.74	in	0.65	in

BEAM DATA Center

Span Length	2.92	ft
Unbraced Length-Top	0	ft
Unbraced Length-Bottom	2.92	ft
Live Load Duration Factor	1.15	
Notch Depth	0.00	

MATERIAL PROPERTIES
#2 - Spruce-Pine-Fir

	Base Values		Adjusted	
Bending Stress:	Fb = 875	psi	Fb' = 1504	psi
	Cd=1.15 CF=1.30 Cr=1.15			
Shear Stress:	Fv = 135	psi	Fv' = 155	psi
	Cd=1.15			
Modulus of Elasticity:	E = 1400	ksi	E' = 1400	ksi
Comp. ⊥ to Grain:	Fc - ⊥ = 425	psi	Fc - ⊥' = 425	psi

Controlling Moment: 1632 ft-lb
1.34 Ft from left support of span 2 (Center Span)
Created by combining all dead loads and live loads on span(s) 2
Controlling Shear: 1295 lb
At a distance d from left support of span 2 (Center Span)
Created by combining all dead loads and live loads on span(s) 2

Comparisons with required sections:	Req'd		Provided	
Section Modulus:	13.02	in3	22.69	in3
Area (Shear):	12.51	in2	24.75	in2
Moment of Inertia (deflection):	7.71	in4	62.39	in4
Moment:	1632	ft-lb	2844	ft-lb
Shear:	1295	lb	2562	lb

LOADING DIAGRAM

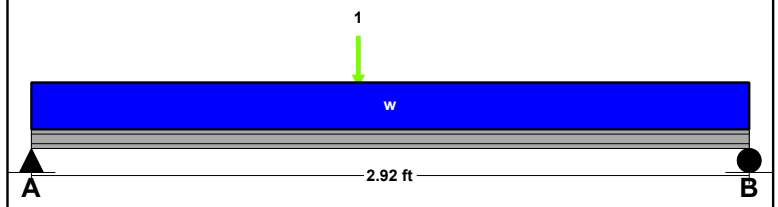

UNIFORM LOADS Center

Uniform Live Load	172	plf
Uniform Dead Load	85	plf
Beam Self Weight	5	plf
Total Uniform Load	262	plf

POINT LOADS - CENTER SPAN

Load Number	One	
Live Load	1264	lb
Dead Load	623	lb
Location	1.33	ft

NOTES

PFS Corporation
Northeast Region
APPROVED
Michelle Floyd
01/22/2020
Approval limited to Factory Built Portion

Project: CC-633 Structural Calcs 01-15-2020 DAK

Location: Header - H1-3 - Uplift
Multi-Loaded Multi-Span Beam
[2015 International Residential Code(2015 NDS)]
(3) 1.5 IN x 5.5 IN x 2.92 FT
#2 - Spruce-Pine-Fir - Dry Use
Section Adequate By: 888.6%
Controlling Factor: Moment

StruCalc 9.0
Glenco, Inc.
217 East Main Street
Middleburg, PA 17842

StruCalc Version 10.0.1.6 1/15/2020 3:36:48 PM

DEFLECTIONS Center

Live Load	-0.01	IN L/5985
Dead Load	0.00	in
Total Load	-0.01	IN L/6073

Live Load Deflection Criteria: L/240 Total Load Deflection Criteria: L/180

REACTIONS

	A		B	
Live Load	-332	lb	-288	lb
Dead Load	7	lb	7	lb
Total Load	-325	lb	-281	lb
Uplift (1.5 F.S)	**-328**	**lb**	**-283**	**lb**
Bearing Length	0.00	in	0.00	in

BEAM DATA Center

Span Length	2.92	ft
Unbraced Length-Top	0	ft
Unbraced Length-Bottom	2.92	ft
Live Load Duration Factor	1.60	
Notch Depth	0.00	

MATERIAL PROPERTIES
#2 - Spruce-Pine-Fir

	Base Values		Adjusted	
Bending Stress:	Fb = 875	psi	Fb' = 2086	psi
	Cd=1.60 Cl=1.00 CF=1.30 Cr=1.15			
Shear Stress:	Fv = 135	psi	Fv' = 216	psi
	Cd=1.60			
Modulus of Elasticity:	E = 1400	ksi	E' = 1400	ksi
Comp. ⊥ to Grain:	Fc - ⊥ = 425	psi	Fc - ⊥' = 425	psi

Controlling Moment: -399 ft-lb
1.34 Ft from left support of span 2 (Center Span)
Created by combining all dead loads and live loads on span(s) 2
Controlling Shear: -326 lb
At left support of span 2 (Center Span)
Created by combining all dead loads and live loads on span(s) 2

Comparisons with required sections:	Req'd	Provided
Section Modulus:	2.29 in3	22.69 in3
Area (Shear):	2.26 in2	24.75 in2
Moment of Inertia (deflection):	2.5 in4	62.39 in4
Moment:	-399 ft-lb	3943 ft-lb
Shear:	-326 lb	3564 lb

LOADING DIAGRAM

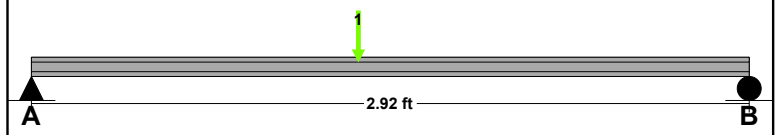

UNIFORM LOADS Center

Uniform Live Load	-40	plf
Uniform Dead Load	0	plf
Beam Self Weight	5	plf
Total Uniform Load	-35	plf

POINT LOADS - CENTER SPAN

Load Number	One	
Live Load	-503	lb
Dead Load	0	lb
Location	1.33	ft

NOTES

PFS Corporation
Northeast Region
APPROVED
Michelle Floyd
01/22/2020
Approval limited to Factory Built Portion

Project: CC-633 Structural Calcs 01-15-2020 DAK

Location: Porch Column
Column
[2015 International Residential Code(2015 NDS)]
5.0 IN DIA. x 6.94 FT
#2 - Northern White Cedar - Wet Use
Section Adequate By: 23.5%

StruCalc 9.0
Glenco, Inc.
217 East Main Street
Middleburg, PA 17842

StruCalc Version 10.0.1.6 1/15/2020 3:36:48 PM

DEFLECTIONS

Deflection due to lateral loads only:	Defl = 0.02	IN = L/4394
Live Load Deflection Criteria:		L/180

VERTICAL REACTIONS

Live Load:	Vert-LL-Rxn =	2277	lb
Dead Load:	Vert-DL-Rxn =	1116	lb
Total Load:	Vert-TL-Rxn =	3393	lb

HORIZONTAL REACTIONS

Total Reaction at Top of Column:	TL-Rxn-Top =	24	lb
Total Reaction at Bottom of Column:	TL-Rxn-Bottom =	24	lb

COLUMN DATA

Total Column Length:	6.94	ft
Unbraced Length (X-Axis) Lx:	6.94	ft
Unbraced Length (Y-Axis) Ly:	6.94	ft
Column End Condition-K (e):	1	
Axial Load Duration Factor	1.15	
Lateral Load Duration Factor	1.00	

COLUMN PROPERTIES

#2 - Northern White Cedar

	Base Values	Adjusted
Compressive Stress:	Fc = 250 psi	Fc' = 226 psi
	Cm=0.91 Cp=0.86	
Bending Stress (X-X Axis):	Fbx = 400 psi	Fbx' = 543 psi
	Cd=1.15 CF=1.00 Cf=1.18	
Bending Stress (Y-Y Axis):	Fby = 400 psi	Fby' = 543 psi
	Cd=1.15 CF=1.00 Cf=1.18	
Modulus of Elasticity:	E = 600 ksi	E' = 600 ksi

Column Section (X-X Axis):	dx =	4.43	in
Column Section (Y-Y Axis):	dy =	4.43	in
Area:	A =	19.63	in2
Section Modulus (X-X Axis):	Sx =	14.5	in3
Section Modulus (Y-Y Axis):	Sy =	14.5	in3
Slenderness Ratio:	Lex/dx =	18.79	
	Ley/dy =	18.79	

Column Calculations (Controlling Case Only):

Controlling Load Case: Axial Total Load Only (L + D)

Actual Compressive Stress:	Fc =	173	psi
Allowable Compressive Stress:	Fc' =	226	psi
Eccentricity Moment (X-X Axis):	Mx-ex =	0	ft-lb
Eccentricity Moment (Y-Y Axis):	My-ey =	0	ft-lb
Moment Due to Lateral Loads (X-X Axis):	Mx =	0	ft-lb
Moment Due to Lateral Loads (Y-Y Axis):	My =	0	ft-lb
Bending Stress Lateral Loads Only (X-X Axis):	Fbx =	0	psi
Allowable Bending Stress (X-X Axis):	Fbx' =	543	psi
Bending Stress Lateral Loads Only (Y-Y Axis):	Fby =	0	psi
Allowable Bending Stress (Y-Y Axis):	Fby' =	543	psi
Combined Stress Factor:	**CSF =**	**0.76**	

LOADING DIAGRAM

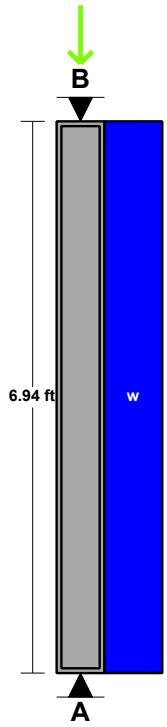

AXIAL LOADING

Live Load:	PL =	2277	lb *
Dead Load:	PD =	1098	lb *
Column Self Weight:	CSW =	18	lb
Total Axial Load:	PT =	3393	lb

* Load obtained from Load Tracker. See Summary Report for details.

LATERAL LOADING (Dy Face)

Uniform Lateral Load: wL-Lat = 7 plf

PFS Corporation
Northeast Region
APPROVED
Michelle Floyd
01/22/2020
Approval limited to Factory Built Portion

NOTES

Project: CC-633 Structural Calcs 01-15-2020 DAK

Location: Porch floor girder - Snow
Multi-Loaded Multi-Span Beam
[2015 International Residential Code(2015 NDS)]
(2) 1.5 IN x 7.25 IN x 7.625 FT
#2 - Southern Pine - Wet Use
Section Adequate By: 79.2%
Controlling Factor: Moment

StruCalc 9.0
Glenco, Inc.
217 East Main Street
Middleburg, PA 17842

StruCalc Version 10.0.1.6 1/15/2020 3:36:49 PM

CAUTIONS
* Laminations are to be fully connected to provide uniform transfer of loads to all members

DEFLECTIONS	Center	
Live Load	0.08	IN L/1204
Dead Load	0.02	in
Total Load	0.10	IN L/931

Live Load Deflection Criteria: L/360 Total Load Deflection Criteria: L/240

REACTIONS	A	B
Live Load	458 lb	458 lb
Dead Load	134 lb	134 lb
Total Load	592 lb	592 lb
Bearing Length	0.52 in	0.52 in

BEAM DATA	Center	
Span Length	7.63	ft
Unbraced Length-Top	1.33	ft
Unbraced Length-Bottom	1.33	ft
Live Load Duration Factor	1.00	
Notch Depth	0.00	

LOADING DIAGRAM

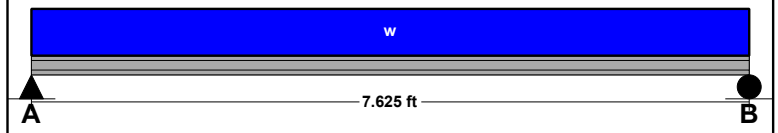

UNIFORM LOADS	Center	
Uniform Live Load	120	plf
Uniform Dead Load	30	plf
Beam Self Weight	5	plf
Total Uniform Load	155	plf

MATERIAL PROPERTIES
#2 - Southern Pine

	Base Values		Adjusted	
Bending Stress:	Fb = 925	psi	Fb' = 923	psi
	Cd=1.00 Cl=1.00 CF=1.00			
Shear Stress:	Fv = 175	psi	Fv' = 170	psi
	Cd=1.00 Cm=0.97			
Modulus of Elasticity:	E = 1400	ksi	E' = 1260	ksi
	Cm=0.90			
Comp. ⊥ to Grain:	Fc - ⊥ = 565	psi	Fc - ⊥' = 379	psi
	Cm=0.67			

Controlling Moment: 1128 ft-lb
3.81 Ft from left support of span 2 (Center Span)
Created by combining all dead loads and live loads on span(s) 2
Controlling Shear: 509 lb
At a distance d from left support of span 2 (Center Span)
Created by combining all dead loads and live loads on span(s) 2

Comparisons with required sections:	Req'd	Provided
Section Modulus:	14.67 in3	26.28 in3
Area (Shear):	4.5 in2	21.75 in2
Moment of Inertia (deflection):	28.49 in4	95.27 in4
Moment:	1128 ft-lb	2021 ft-lb
Shear:	509 lb	2461 lb

NOTES

PFS Corporation
Northeast Region
APPROVED
Michelle Floyd
01/22/2020
Approval limited to Factory Built Portion

Project: CC-633 Structural Calcs 01-15-2020 DAK

Location: Porch floor girder - Uplift
Multi-Loaded Multi-Span Beam
[2015 International Residential Code(2015 NDS)]
(2) 1.5 IN x 7.25 IN x 7.625 FT
#2 - Southern Pine - Wet Use
Section Adequate By: 671.6%
Controlling Factor: Deflection

StruCalc 9.0
Glenco, Inc.
217 East Main Street
Middleburg, PA 17842

StruCalc Version 10.0.1.6 1/15/2020 3:36:49 PM

CAUTIONS
* Laminations are to be fully connected to provide uniform transfer of loads to all members

DEFLECTIONS	Center	
Live Load	-0.03	IN L/2778
Dead Load	0.00	in
Total Load	-0.03	IN L/3085

Live Load Deflection Criteria: L/360 Total Load Deflection Criteria: L/240

REACTIONS	A	B
Live Load	-198 lb	-198 lb
Dead Load	20 lb	20 lb
Total Load	-178 lb	-178 lb
Uplift (1.5 F.S)	**-185 lb**	**-185 lb**
Bearing Length	0.02 in	0.02 in

BEAM DATA	Center
Span Length	7.63 ft
Unbraced Length-Top	1.33 ft
Unbraced Length-Bottom	1.33 ft
Live Load Duration Factor	1.60
Notch Depth	0.00

MATERIAL PROPERTIES
#2 - Southern Pine

	Base Values	Adjusted
Bending Stress:	Fb = 925 psi	Fb' = 1474 psi
	Cd=1.60 Cl=1.00 CF=1.00	
Shear Stress:	Fv = 175 psi	Fv' = 272 psi
	Cd=1.60 Cm=0.97	
Modulus of Elasticity:	E = 1400 ksi	E' = 1260 ksi
	Cm=0.90	
Comp. ⊥ to Grain:	Fc - ⊥ = 565 psi	Fc - ⊥' = 379 psi
	Cm=0.67	

Controlling Moment: -340 ft-lb
3.81 Ft from left support of span 2 (Center Span)
Created by combining all dead loads and live loads on span(s) 2
Controlling Shear: 178 lb
8.0 Ft from left support of span 2 (Center Span)
Created by combining all dead loads and live loads on span(s) 2

Comparisons with required sections:	Req'd	Provided
Section Modulus:	2.77 in3	26.28 in3
Area (Shear):	0.99 in2	21.75 in2
Moment of Inertia (deflection):	12.35 in4	95.27 in4
Moment:	-340 ft-lb	3229 ft-lb
Shear:	178 lb	3938 lb

LOADING DIAGRAM

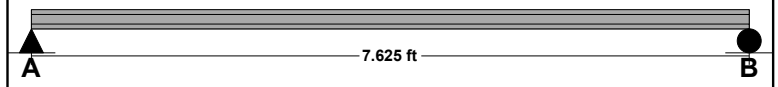

UNIFORM LOADS	Center
Uniform Live Load	-52 plf
Uniform Dead Load	0 plf
Beam Self Weight	5 plf
Total Uniform Load	-47 plf

NOTES

PFS Corporation
Northeast Region
APPROVED
Michelle Floyd
01/22/2020
Approval limited to Factory Built Portion

Project: CC-633 Structural Calcs 01-15-2020 DAK

Location: Porch header - Snow
Multi-Loaded Multi-Span Beam
[2015 International Residential Code(2015 NDS)]
5.0 IN x 5.5 IN x 7.625 FT
24F-E1 - E-Rated Southern Pine - Dry Use
Section Adequate By: 108.3%
Controlling Factor: Moment

StruCalc 9.0
Glenco, Inc.
217 East Main Street
Middleburg, PA 17842

StruCalc Version 10.0.1.6 1/15/2020 3:36:49 PM

DEFLECTIONS Center

Live Load	0.15	IN L/596
Dead Load	0.08	in
Total Load	0.23	IN L/392

Live Load Deflection Criteria: L/240 Total Load Deflection Criteria: L/180

REACTIONS

	A		B	
Live Load	961	lb	961	lb
Dead Load	498	lb	498	lb
Total Load	1459	lb	1459	lb
Bearing Length	0.36	in	0.36	in

BEAM DATA Center

Span Length	7.63	ft
Unbraced Length-Top	2	ft
Unbraced Length-Bottom	7.63	ft
Live Load Duration Factor	1.15	
Camber Adj. Factor	1	
Camber Required	0.08	
Notch Depth	0.00	

LOADING DIAGRAM

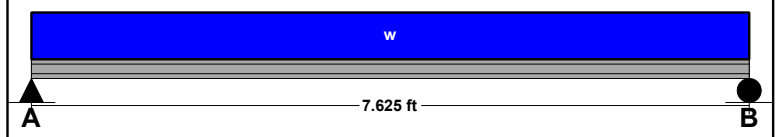

UNIFORM LOADS Center

Uniform Live Load	252	plf
Uniform Dead Load	124	plf
Beam Self Weight	7	plf
Total Uniform Load	383	plf

MATERIAL PROPERTIES
24F-E1 - E-Rated Southern Pine

		Base Values			Adjusted	
Bending Stress:	Fb =	2400	psi	*Controlled by:*		
	Fb_cmpr =	1450	psi	Fb' =	2756	psi
	Cd=1.15 Cl=1.00					
Shear Stress:	Fv =	300	psi	Fv' =	345	psi
	Cd=1.15					
Modulus of Elasticity:	E =	1800	ksi	E' =	1800	ksi
Comp. ⊥ to Grain:	Fc - ⊥ =	805	psi	Fc - ⊥' =	805	psi

Controlling Moment: 2780 ft-lb
3.81 Ft from left support of span 2 (Center Span)
Created by combining all dead loads and live loads on span(s) 2
Controlling Shear: -1283 lb
At a distance d from right support of span 2 (Center Span)
Created by combining all dead loads and live loads on span(s) 2

Comparisons with required sections:	Req'd		Provided	
Section Modulus:	12.1	in3	25.21	in3
Area (Shear):	5.58	in2	27.5	in2
Moment of Inertia (deflection):	31.79	in4	69.32	in4
Moment:	2780	ft-lb	5790	ft-lb
Shear:	-1283	lb	6325	lb

NOTES

PFS Corporation
Northeast Region
APPROVED
Michelle Floyd
01/22/2020
Approval limited to Factory Built Portion

Project: CC-633 Structural Calcs 01-15-2020 DAK

Location: Porch header - Uplift
Multi-Loaded Multi-Span Beam
[2015 International Residential Code(2015 NDS)]
5.0 IN x 5.5 IN x 7.625 FT
24F-E1 - E-Rated Southern Pine - Dry Use
Section Adequate By: 1151.2%
Controlling Factor: Deflection

StruCalc 9.0
Glenco, Inc.
217 East Main Street
Middleburg, PA 17842

StruCalc Version 10.0.1.6 1/15/2020 3:36:49 PM

DEFLECTIONS

	Center	
Live Load	-0.03	IN L/3003
Dead Load	0.00	in
Total Load	-0.03	IN L/3456

Live Load Deflection Criteria: L/240 Total Load Deflection Criteria: L/180

REACTIONS

	A	B
Live Load	-191 lb	-191 lb
Dead Load	25 lb	25 lb
Total Load	-166 lb	-166 lb
Uplift (1.5 F.S)	**-174 lb**	**-174 lb**
Bearing Length	0.01 in	0.01 in

BEAM DATA

	Center	
Span Length	7.63	ft
Unbraced Length-Top	2	ft
Unbraced Length-Bottom	7.63	ft
Live Load Duration Factor	1.60	
Camber Adj. Factor	1	
Camber Required	0	
Notch Depth	0.00	

LOADING DIAGRAM

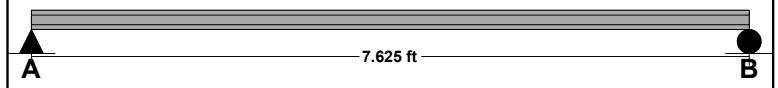

UNIFORM LOADS

	Center	
Uniform Live Load	-50	plf
Uniform Dead Load	0	plf
Beam Self Weight	7	plf
Total Uniform Load	-43	plf

MATERIAL PROPERTIES

24F-E1 - E-Rated Southern Pine

	Base Values		Adjusted	
Bending Stress:	Fb =	2400 psi	*Controlled by:*	
	Fb_cmpr =	1450 psi	Fb_cmpr' =	2311 psi
	Cd=1.60 Cl=1.00			
Shear Stress:	Fv =	300 psi	Fv' =	480 psi
	Cd=1.60			
Modulus of Elasticity:	E =	1800 ksi	E' =	1800 ksi
Comp. ⊥ to Grain:	Fc - ⊥ =	805 psi	Fc - ⊥' =	805 psi

Controlling Moment: -316 ft-lb
3.81 Ft from left support of span 2 (Center Span)
Created by combining all dead loads and live loads on span(s) 2
Controlling Shear: -166 lb
At left support of span 2 (Center Span)
Created by combining all dead loads and live loads on span(s) 2

Comparisons with required sections:	Req'd	Provided
Section Modulus:	1.64 in3	25.21 in3
Area (Shear):	0.52 in2	27.5 in2
Moment of Inertia (deflection):	5.54 in4	69.32 in4
Moment:	-316 ft-lb	4854 ft-lb
Shear:	-166 lb	8800 lb

NOTES

PFS Corporation
Northeast Region
APPROVED
Michelle Floyd
01/22/2020
Approval limited to Factory Built Portion

Electrical Load Calculation Form:

Date: 1/15/2020 Performed By: GLENCO INC Mfg: **Cozy Cabins LLC**

Project: CC-633 / Paul Rivers Model: Ranch

Air Conditioning	*		0
Central Electric Space Heating	(0	x .65) *	0
Less Than Four Separately Controlled Electric Space Heating Units	(0	x .65) *	0
Four or More Separately Controlled Electric Space Heating Units	(11750	x .40) *	4700

* Use the larger of the air-conditioning or the diversified demand of the heating load.

Other Loads:

General Lighting	W	L	Watts or Volt-Amps	Circuit Ampacity	Wire Size
1st Story	(29.14 x	56 x 3)	4895.52	15 A	14-2
2nd Story	(0 x	0 x 3)	0	15 A	14-2
Small Appliances	(2 x	1500)	3000	20 A	12-2
Range			11400	40 A	8-3
Microwave			1200	20 A	12-2
Refrigerator			1920	20 A	12-2
Washer			1500	20 A	12-2
Dryer			5800	30 A	10-3
Water Heater			5500	30 A	10-2
Dishwasher			1200	20 A	12-2
Other			0	N/A	N/A

Subtotal: 36415.52

PFS Corporation
Northeast Region
APPROVED
Michelle Floyd
01/22/2020
Approval limited to Factory Built Portion

First 10 KW of other loads @ 100%	=	10000	
Remainder of other loads @ 40% (26416 x .40)	=	10566	
Heat or A/C from Above:		4700	*
Total Calculated Load:	=	25266	
Required Service Size: 25266 4 240	=	105.3	Amps
Installed Panel Size	**=**	**200**	**Amps**
Max panel amps @ 80%	=	160	Amps

file name: CC-633 / Paul Rivers

JOB CC-633 / Paul Rivers

SHEET NO. 1 OF 1

CALCULATED BY _____ DATE _____

CHECKED BY _____ DATE _____

Whole House Ventilation Supply Air Worksheet

Manual J Table 5A

Table 5A
Default Air Change Values for Three or Four Exposures

Construction	Air Changes per Hour (Heating) Floor Area of Heated Space (SqFt)					Infiltration CFM for One Fireplace*
	900 or Less	901 to 1500	1501 to 2000	2001 to 3000	3000 or More	
Tight	0.21	0.16	0.14	0.11	0.10	0
Semi-Tight	0.41	0.31	0.26	0.22	0.19	13
Average	0.61	0.45	0.38	0.32	0.28	20
Semi-Loose	0.95	0.70	0.59	0.49	0.43	27
Loose	1.29	0.94	0.80	0.66	0.58	33

For one additional fireplace, add 7 CFM to the above fireplace values. For two or more additional fireplaces, add 10 CFM (total) to the above.

2015 IRC Table M1507.3.3(1)

2018 IRC Table M1505.4.3(1)

CONTINUOUS WHOLE-HOUSE MECHANICAL VENTILATION SYSTEM AIRFLOW RATE REQUIREMENTS

DWELLING UNIT FLOOR AREA (square feet)	NUMBER OF BEDROOMS				
	0 – 1	2 – 3	4 – 5	6 – 7	> 7
	Airflow in CFM				
< 1,500	30	45	60	75	90
1,501 – 3,000	45	60	75	90	105
3,001 – 4,500	60	75	90	105	120
4,501 – 6,000	75	90	105	120	135
6,001 – 7,500	90	105	120	135	150
> 7,500	105	120	135	150	165

For SI: 1 square foot = 0.0929 m^2, 1 cubic foot per minute = 0.0004719 m^3/s.

Construction:	Average	
1st story area sq.ft.	1632	sf
1st story ceiling height	8.25	ft
Total Building sq.ft.	1632	sf
Building volume cu.ft.	13464.0	cf
Air Change/Hr Value	0.38	ACH
(ACH*Volume)/60 min = CFM Provided	85.3	CFM
CFM Required per Table M1507.3.3(1)	60	CFM

PFS Corporation
Northeast Region
APPROVED
Michelle Floyd
01/22/2020
Approval limited to Factory Built Portion

SUPPLY OK

Whole house ventilation exhaust is provided by a continuous bath fan. See electrical plan for the identified fixture location and size.