Project Name:

CC-729 / NICOLE HIDALGO

22 MUSTANG RD, LAKE ARIEL, PA 18436 (WAYNE COUNTY)

CLASSIFICATION	
FOUNDATION:	_X_ BASEMENT
	___ CRAWL
USE GROUP:	SINGLE FAMILY
CONSTRUCTION TYPE:	VB WOOD FRAMED UNPROTECTED
LOCATION:	NOT LESS THAN 60" TO PROPERTY LINE

DESIGN LOADS	
ROOF LOAD:	60 PSF GROUND SNOW LOAD
ROOF DEAD LOAD:	10 PSF
CEILING DEAD LOAD:	10 PSF
CEILING LIVE LOAD:	20 PSF (STORAGE) / 40 PSF (HABITABLE)
FLOOR LIVE LOAD:	40 PSF
FLOOR DEAD LOAD:	10 PSF
WIND SPEED (V-ULT):	115 MPH (3 SEC GUST)
EXPOSURE:	C
SEISMIC CATEGORY:	B
SITE CLASS:	D

APPLICABLE CODES	
BUILDING CODE:	2015 IRC with PA IHA AMENDMENTS
ELECTRICAL CODE:	2014 NATIONAL ELECTRICAL CODE
ENERGY CODE:	2015 IECC ENERGY CONSERVATION CODE

DRAWING INDEX

SHEET#	DESCRIPTION	REV. DATE	LAYER CODE
0	COVER SHEET	.	.
1	FOUNDATION	.	FD
1A	FOUNDATION DETAILS	.	.
2	FLOOR PLAN -1ST STORY	.	1Q
2A	FLOOR PLAN -2ND STORY	.	2Q
3	ELECTRICAL PLAN -1ST STORY	.	1E
3A	ELECTRICAL PLAN -2ND STORY	.	2E
3B	ELECTRIC BASEBOARD HEAT PLAN	.	1H
4	FRONT & REAR ELEVATIONS	.	1EV
4A	LEFT & RIGHT SIDE ELEVATIONS	.	2EV
5	CROSS SECTION	.	1SE
5A	CROSS SECTION - DECK	.	2SE
5B	PROW ROOF DETAILS	.	5SE
5C	VAULT TRUSS CONNECTIONS	.	.
5D	2-STORY TRUSS CONNECTIONS	.	.
5E	BEAM & COLUMN CONNECTIONS	.	.
5F	BEAM & COLUMN CONNECTIONS	.	.
5G	BEAM & COLUMN CONNECTIONS	.	.
5H	LVL CONNECTION DETAILS	.	7SE
6-9	RESERVED	.	.
10	WINDOW & DOOR SCHEDULE	.	.
11	BRACED WALL PLAN	.	1PR
11A	BRACED WALL DETAILS	.	.
12	DECK CONNECTION DETAILS	.	.

ADDITIONAL PAGES	
1-11	ENERGY CHECK
1-5	TRUSS CERTIFICATION
1	ELECTRICAL LOAD CALCULATIONS
1	WHOLE HOUSE VENTILATION CALCULATION
1-36	STRUCTURAL CALCULATIONS

COZY CABINS LLC
455 FARMERSVILLE RD
NEW HOLLAND, PA 17557
PHONE: 717-354-3278
FAX: 717-354-0015
WWW.MYCOZYCABINS.COM

THESE DRAWINGS HAVE BEEN PREPARED BY GLENCO, INC.

THIS DOCUMENT AND THE SUBJECT MATTER CONTAINED HEREIN IS PROPRIETARY AND MAY NOT BE REPRODUCED WITHOUT WRITTEN PERMISSION
www.glencoinc.com

CUSTOMER/PROJECT:
NICOLE HIDALGO
22 MUSTANG ROAD
LAKE ARIEL, PA 18436

BUILDER:
COZY CABINS, LLC
455 FARMERSVILLE RD.
NEW HOLLAND, PA 17557

REV#	DATE	REVISIONS	BY

DRAWN BY: NKG
DATE: 01/21/21
SCALE: NTS
CHECKED BY: LDZ

FILE: CC-729
SQ.FT.: 1,660
STATE: PA
TYPE: CAPE
MODEL: CHALET
DRAWING: COVER SHEET
SHEET: 0

BUILDER: COZY CABINS LLC

S/N: CC01210729

THIS HOUSE HAS BEEN EXTRACTED FROM THE APPROVED SYSTEMS PLAN ON FILE WITH THE STATE.

GENERAL NOTES

1. ALL WORK SHALL CONFORM TO THE CODES REFERENCED IN THE COVER SHEET AND MEET LOCAL ZONING REQUIREMENTS.
2. ALL WORK SHALL CONFORM TO THE DESIGN LOADS REFERENCED IN THE COVER SHEET.
3. ALL WORK IN THE FACTORY SHALL COMPLY WITH THE APPROVED DRAWINGS.
4. ALL SITE WORK SHALL COMPLY WITH ANY APPLICABLE MANUFACTURER APPROVED DRAWINGS OR LOCAL CODES AS REQUIRED.
5. SPECIFIED MATERIALS MAY BE SUBSTITUTED WITH MATERIALS THAT ARE EQUAL OR BETTER.
6. NO STRUCTURAL MEMBER SHALL BE CUT FOR PIPE'S, DUCTS, ETC, UNLESS SPECIFICALLY DETAILED IN THIS PACKAGE.
7. STRUCTURAL STEEL SHALL CONFORM TO THE LATEST SPECIFICATIONS OF THE ASTM AND HAVE A MIN. YIELD OF 36,000 PSI.
8. PLYWOOD SHALL BE GRADE STAMPED BY THE AMERICAN PLYWOOD ASSOCIATION OR EQUAL AND SHALL BE RATED SHEATHING.
9. STRUCTURAL USE LUMBER SHALL BE STAMPED AY AN APPROVED AGENCY AND SHALL CONFORM TO LATEST GRADING RULES FOR THE WESTERN LUMBER ASSOCIATION OR EQUAL
10. STRESS RATED BOARDS SHALL BE STAMPED ACCORDING TO GRADE SPECIES AND VALUE AND SHALL BE MARKED "SRB" 11 FINGER JOINTED
11. INTERIOR STAIRWAY REQUIREMENTS TO COMPLY WITH CODE REFERENCE

D. Renee Moist

Digitally signed by D. Renee Moist
DN: cn=D. Renee Moist, o, ou=PFS, email=renee.moist@pfstec o.com, c=US
Date: 2021.03.23 10:23:12 -04'00'

PFS CORPORATION
APPROVED
Plans Certified to comply with all Applicable codes and regulations of the
PA DCED Industrialized Housing Regulations
Signature: Renee Moist
Title: Staff Plan Reviewer
Date: 3/23/21

DISCLAIMER: These drawings have been prepared and reviewed in accordance with all applicable codes. This drawing set is not intended to be all inclusive, nor does this set detail every code required aspect of this building. The building contractor is responsible for compliance with all applicable codes under the supervision of the local authority having jurisdiction whether detailed in this set or not. Cozy Cabins LLC, its employees and affiliates assume no liability for errors and omissions from this set of drawings as may be permitted by law.

SEAL:

NOTES:

1. ALL EXPOSED LUMBER TO BE OF NATURALLY DURABLE WOOD OR WOOD THAT IS PRESERVATIVE-TREATED IN ACCORDANCE WITH AWPA U1. PRESERVATIVES SHALL BE LISTED IN SECTION 4 OF AWPA U1.
2. ALL LUMBER THAT IS IN CONTACT WITH CONCRETE OR THE GROUND MUST BE APPROVED PRESSURE-PRESERVATIVE-TREATED WOOD SUITABLE FOR GROUND CONTACT USE.
3. ALL SUPPORT COLUMNS SHALL BE APPROVED WOOD OF NATURAL DECAY RESISTANCE OR APPROVED PRESSURE-PRESERVATIVE-TREATED WOOD.
4. ALL FIELD CUT ENDS, NOTCHES, DRILLED HOLES OF PRESERVATIVE-TREATED WOOD SHALL BE TREATED IN THE FIELD IN ACCORDANCE WITH AWPA M4.
5. ALL NAILS USED IN THE CONSTRUCTION OF PORCHES AND DECKS SHALL BE THREADED AND MEET THE REQUIREMENTS OF ASTM F 1667. THREADED NAILS AS STATED IN THIS DOCUMENT INCLUDE HELICAL (SPIRAL) AND ANNULAR (RINK SHANK) NAILS. WOOD SCREWS SHALL MEET THE REQUIREMENTS OF ANSI/ASME B18.6.1. BOLTS AND LAG SCREWS SHALL MEET THE REQUIREMENTS OF ANSI/ASME B18.2.1.
6. FLASHING SHALL BE CORROSION-RESISTANT METAL OF A MINIMUM NOMINAL THICKNESS OF 0.019 INCHES OR AN APPROVED NON-METALLIC MATERIAL.
   - 6.1. ALUMINUM SHOULD NOT BE USED IN DIRECT CONTACT WITH LUMBER TREATED WITH PRESERVATIVES THAT CONTAIN COPPER SUCH AS ACQ, COPPER AZOLE, OR ACZA.
7. ALL SCREWS, BOLTS, NAILS, NUTS AND WASHERS FOR USE WITH PRESERVATIVE TREATED WOOD SHALL BE HOT-DIPPED ZINC-COATED GALVANIZED STEEL, STAINLESS STEEL, SILICON BRONZE, OR COPPER. FASTENERS SHALL BE HOT DIPPED GALVANIZED AND SHALL MEET THE REQUIREMENTS OF ASTM A 153, CLASS D FOR FASTENERS 3/8" DIAMETER AND SMALLER, OR CLASS C FOR FASTENERS WITH DIAMETERS OVER 3/8".
8. FASTENERS OTHER THAN NAILS AND TIMBER RIVETS SHALL BE PERMITTED TO BE OF MECHANICALLY DEPOSITED ZINC-COATED STEEL WITH COATING WEIGHTS IN ACCORDANCE WITH ASTM B 695, CLASS 55, MINIMUM.
9. ALL HARDWARE (JOIST HANGERS, CAST-IN-PLACE POST ANCHORS, ETC.) THAT IS EXPOSED TO WEATHER OR IN CONTACT WTIH GROUND, CONCRETE OR PRESSURE TREATED LUMBER SHALL BE GALVANIZED OR SHALL BE STAINLESS STEEL. HARDWARE TO BE HOT DIPPED GALVANIZED PRIOR TO FABRICATION SHALL MEET ASTM A 653, G-185 COATING. HARDWARE TO BE HOT DIPPED GALVANIZED AFTER FABRICATION SHALL MEET ASTM A123.
10. FASTENERS AND CONNECTORS EXPOSED TO SALT WATER OR LOCATED WITHIN 300 FEET OF A SALT WATER SHORELINE SHALL BE STAINLESS STEEL GRADE 304 OR 316.
11. ALL OTHER COATED OR NON-FERROUS FASTENERS OR HARDWARE SHALL BE AS APPROVED BY THE AUTHORITY HAVING JURISDICTION.
12. HOT-DIPPED ZINC-COATED GALVANIZED STEEL CONNECTORS ARE REQUIRED AT ANY CONNECTIONS INTO CONCRETE
13. FASTENERS AND CONNECTORS INSTALLED IN TREATED LUMBER OTHER THAN MATERIAL WITH A CHEMICAL RETENTION GREATER THAN AWPA OR UC4A SHALL BE STAINLESS STEEL GRADE 304 OR 316.

THIS FOUNDATION SHALL BE DESIGNED BY A LICENSED PROFESSIONAL WITH KNOWLEDGE OF LOCAL SOIL CONDITIONS. THIS FOUNDATION PLAN IS MEANT ONLY TO COMMUNICATE THE DIMENSIONAL AND LOADING INFORMATION TO THE DESIGN PROFESSIONAL SO THE FOUNDATION DESIGN IS COORDINATED WITH THE REQUIREMENTS OF THE MODULAR BUILDING. FOUNDATION WALLS, FOOTINGS, COLUMNS, PIERS, AND SLAB TO BE DESIGNED BY OTHERS TO MEET STATE AND/OR LOCAL CODES USING EXISTING SOIL ANALYSIS. MANUFACTURER ASSUMES NO RESPONSIBILITY FOR ERRORS IN THE CONSTRUCTION OF THE FOUNDATION. ANY AND ALL DIMENSIONS ARE TO BE CHECKED AND VERIFIED AGAINST THE FLOOR PLAN BY BUILDER/DEALER PRIOR TO FOUNDATION CONSTRUCTION. THE BUILDER/DEALER MUST CONTACT THE MANUFACTURER WITH ANY DISCREPANCIES PRIOR TO THE START OF CONSTRUCTION. MANUFACTURER WILL NOT ASSUME ANY RESPONSIBILITY IF BUILDER/DEALER/OWNER EXCEEDS MAXIMUM SPACING OF SUPPORTS AS SHOWN ON THIS DRAWING.

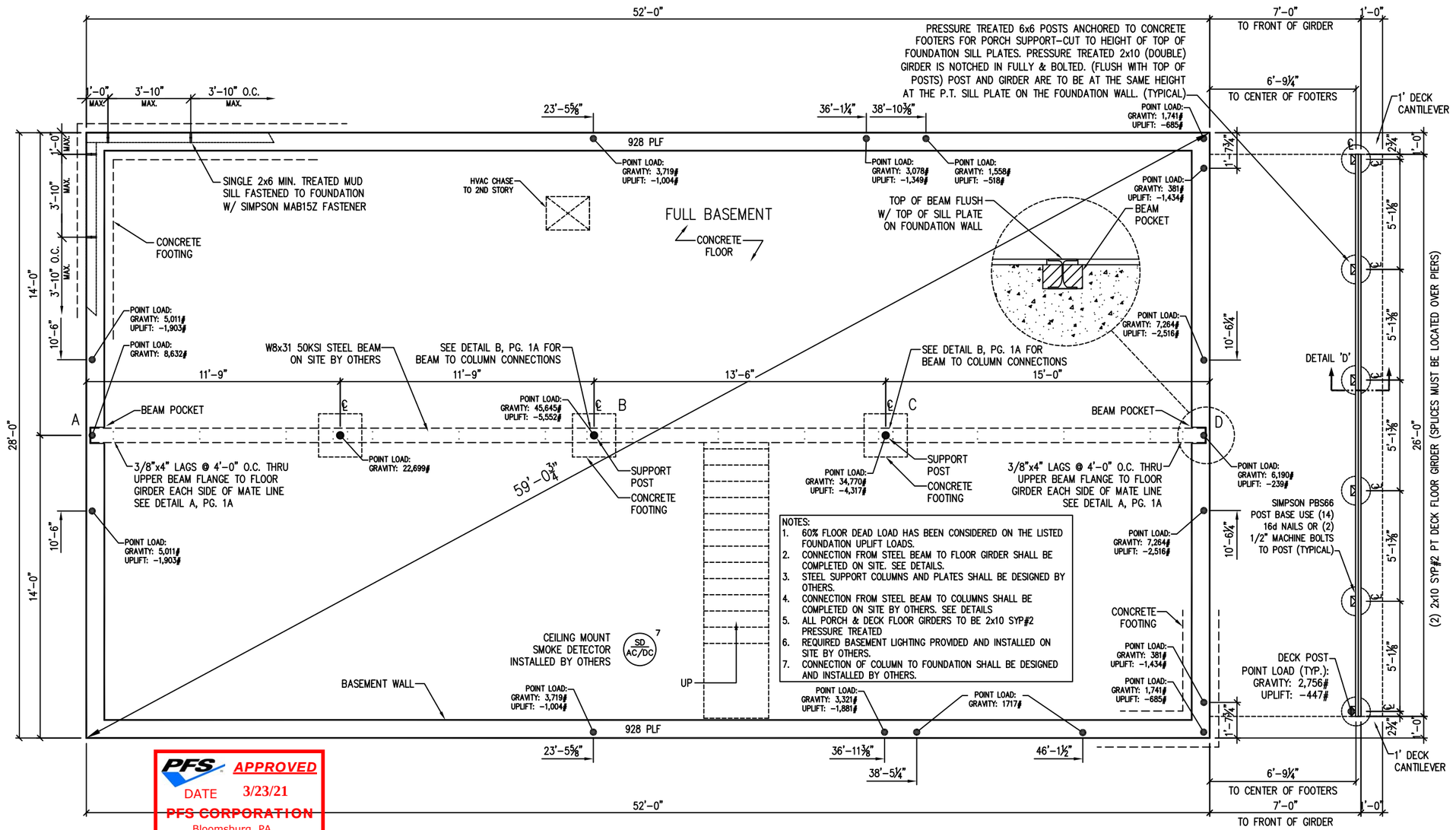

PFS APPROVED
DATE 3/23/21
~~PFS CORPORATION~~
Bloomsburg, PA

FOUNDATION NOTES:

1. BUILDER TO LOCATE AND INSTALL BASEMENT WINDOWS OR VENT. 1/150 FLOOR AREA REQUIRED. VENTING MAY BE REDUCED TO 1/1500 FLOOR AREA WHEN A CLASS I VAPOR BARRIER IS INSTALLED. VENT OPENINGS SHALL BE LOCATED WITHIN 3' OR EACH CORNER TO PROVIDE CROSS VENTILATION.
2. ALL OPENINGS AND CONC. JOINTS TO BE COMPLETELY CAULKED.
3. R402.2 CONCRETE. ALL CONCRETE SHALL HAVE A MINIMUM SPECIFIED COMPRESSIVE STRENGTH AS SHOWN ON TABLE R402.2
4. ALL EXHAUST SYSTEMS TO TERMINATE TO EXTERIOR WITH BACK DRAFT BAFFLE

PA FOUNDATIONS MUST MEET THE FOLLOWING CRITERIA:

A-BE A TRUE FOOTPRINT OF THE BUILDING AND IS SPECIFIC TO THE SAID UNIT.
B-ALL LOADS HAVE SUPPORT COLUMNS FOR ALL OPENINGS GREATER THAN 4 FT. IF ONE IS MISSING, ONE MUST BE INSTALLED.
C-IF FILL IS MORE THAN 5 FT, USE 12" INCH BLOCK ON 20"x10" CONCRETE FOOTINGS
D-FOUNDATION DRAINAGE AND DAMP PROOFING TO CONFORM TO CODE
E-ALL ELECTRICAL AND MECHANICAL INSTRUCTIONS TO CONFORM TO CURRENT STATE & LOCAL CODE REQUIREMENTS
F-BASEMENT WALL OR BASEMENT CEILING INSULATION MAY BE SPELLED OUT ON FOUNDATION PRINTS TO COMPLETE COMPLIANCE TO ENERGY REQUIREMENTS PER 2015 IECC.
G-MINIMUM 6" FROM BOTTOM OF GRADE TO SIDING NEEDS TO BE PROVIDED AT SITE.
H-PURCHASER RESPONSIBLE FOR ALL SERVICE ENTRY CONNECTIONS AND ON-SITE TESTING AS REQUIRED BY LOCAL JURISDICTION
I-FOUNDATIONS PRINTS MAY NEED TO BE SEALED BY A PROFESSIONAL ENGINEER WHERE IT IS A REQUIREMENT OF THE LOCAL JURISDICTION.
J-BACK FILL AND TAMPING SHALL BE DONE PER THE LOCAL BUILDING OFFICIAL.

PA MODULAR EXEMPTION NOTES:

THE MANUFACTURER CERTIFIES THAT THE STRUCTURE (CC-729) IS NOT A MANUFACTURED HOME SUBJECT TO THE PROVISIONS OF THE NATIONAL MANUFACTURED HOUSING CONSTRUCTION AND SAFETY STANDARDS ACT AND IS:

(1) DESIGNATED ONLY FOR ERECTION OR INSTALLATION ON A SITE-BUILT PERMANENT FOUNDATION.
(2) NOT DESIGNED TO BE MOVED ONCE SO ERECTED OR INSTALLED.
(3) DESIGNED AND MANUFACTURED TO COMPLY WITH 2015 IRC.
(4) TO THE MANUFACTURER'S KNOWLEDGE THE STRUCTURE IS NOT INTENDED TO BE USED OTHER THAN ON A SITE-BUILT PERMANENT FOUNDATION.

COZY CABINS LLC
455 FARMERSVILLE RD.
NEW HOLLAND, PA 17557
PHONE: 717-354-3278
FAX: 717-354-0015
WWW.MYCOZYCABINS.COM

THESE DRAWINGS HAVE BEEN PREPARED BY GLENCO, INC.

THIS DOCUMENT AND THE SUBJECT MATTER CONTAINED HEREIN IS PROPRIETARY AND MAY NOT BE REPRODUCED WITHOUT WRITTEN PERMISSION
www.glencoinc.com

CUSTOMER/PROJECT: NICOLE HIDALGO
22 MUSTANG ROAD
LAKE ARIEL, PA 18436

BUILDER: COZY CABINS, LLC
455 FARMERSVILLE RD.
NEW HOLLAND, PA 17557

REV#	DATE	REVISIONS	BY

DRAWN BY: NKG
DATE: 01/21/21
SCALE: 3/16"=1'-0"
CHECKED BY: LDZ

FILE: CC-729
SQ.FT.: 1,660
STATE: PA
TYPE: CAPE
MODEL: CHALET
DRAWING: FOUNDATION
SHEET: 1

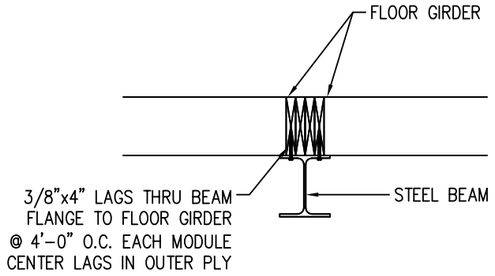

DETAIL A
STEEL BEAM CONNECTION
SECTION VIEW

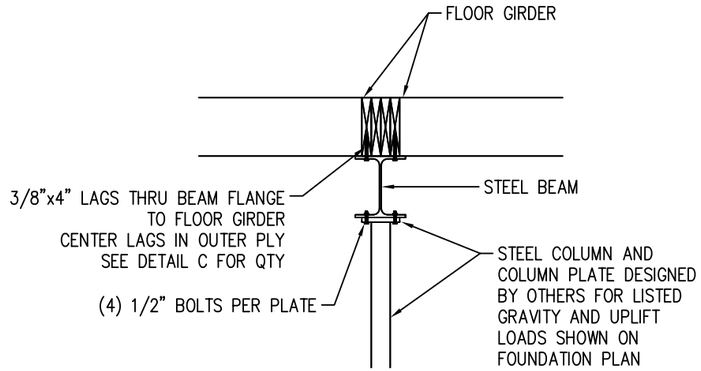

DETAIL B
STEEL BEAM W/COLUMN CONNECTION
SECTION VIEW

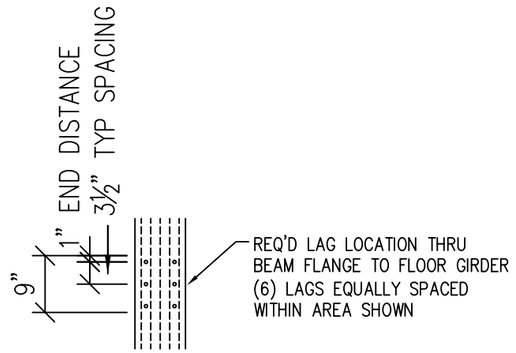

DETAIL C
BEAM CONNECTION
TOP VIEW
(7,402# MAX UPLIFT CAPACITY)

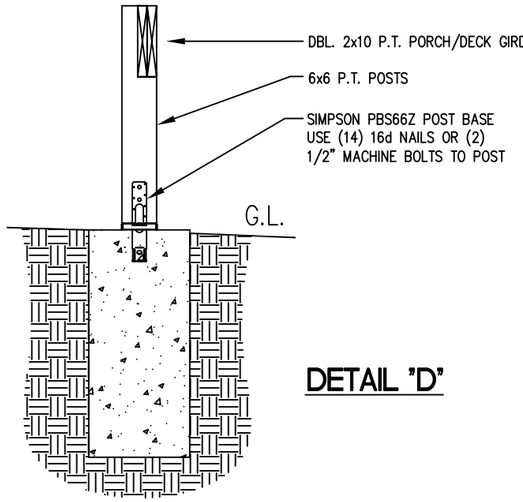

DETAIL "D"

PFS APPROVED
DATE 3/23/21
PFS CORPORATION
Bloomsburg, PA

COZY CABINS LLC
455 FARMERSVILLE RD
NEW HOLLAND, PA 17557
PHONE: 717-354-3278
FAX: 717-354-0015
WWW.MYCOZYCABINS.COM

THESE DRAWINGS HAVE BEEN PREPARED BY
GLENCO, INC.

THIS DOCUMENT AND THE SUBJECT MATTER CONTAINED HEREIN IS PROPRIETARY AND MAY NOT BE REPRODUCED WITHOUT WRITTEN PERMISSION
www.glencoinc.com

CUSTOMER/PROJECT:
NICOLE HIDALGO
22 MUSTANG ROAD
LAKE ARIEL, PA 18436

BUILDER:
COZY CABINS, LLC
455 FARMERSVILLE RD.
NEW HOLLAND, PA 17557

REV#	DATE	REVISIONS	BY

DRAWN BY: NKG
DATE: 01/21/21
SCALE: 1/2"=1'-0"
CHECKED BY: LDZ

FILE: CC-729
SQ.FT.: 1,660
STATE: PA
TYPE: CAPE
MODEL: CHALET
DRAWING: FOUNDATION DETAILS
SHEET: 1A

** 2x10 SPF#2 1ST STORY FLOOR JOISTS @ 16" O.C.
** 2x6 EXTERIOR WALLS @ 16" O.C.
** 2x4 MATE WALLS @ 16" O.C.
** (3) 2x6 SPF#2 HEADERS OVER EXT BEARING WALL OPENINGS (UNLESS INDICATED OTHERWISE)
** (2) 2x6 SPF#2 HEADERS OVER MATE WALL OPENINGS (UNLESS INDICATED OTHERWISE)
** WATER HEATER SUPPLIED & INSTALLED ON-SITE BY OTHERS

PFS APPROVED
DATE 3/23/21
PFS CORPORATION
Bloomsburg, PA

2018 IRC, TABLE R602.7.5
MINIMUM NUMBER OF FULL HEIGHT STUDS
AT EACH END OF HEADERS IN EXTERIOR WALLS

MAXIMUM HEADER SPAN (FEET)	ULTIMATE DESIGN WIND SPEED AND EXPOSURE CATEGORY	
	<140 MPH, EXPOSURE B OR <130 MPH, EXPOSURE C	≤115 MPH, EXPOSURE B
4	1	1
6	2	1
8	2	1
10	3	2
12	3	2
14	3	2
16	4	2
18	4	2

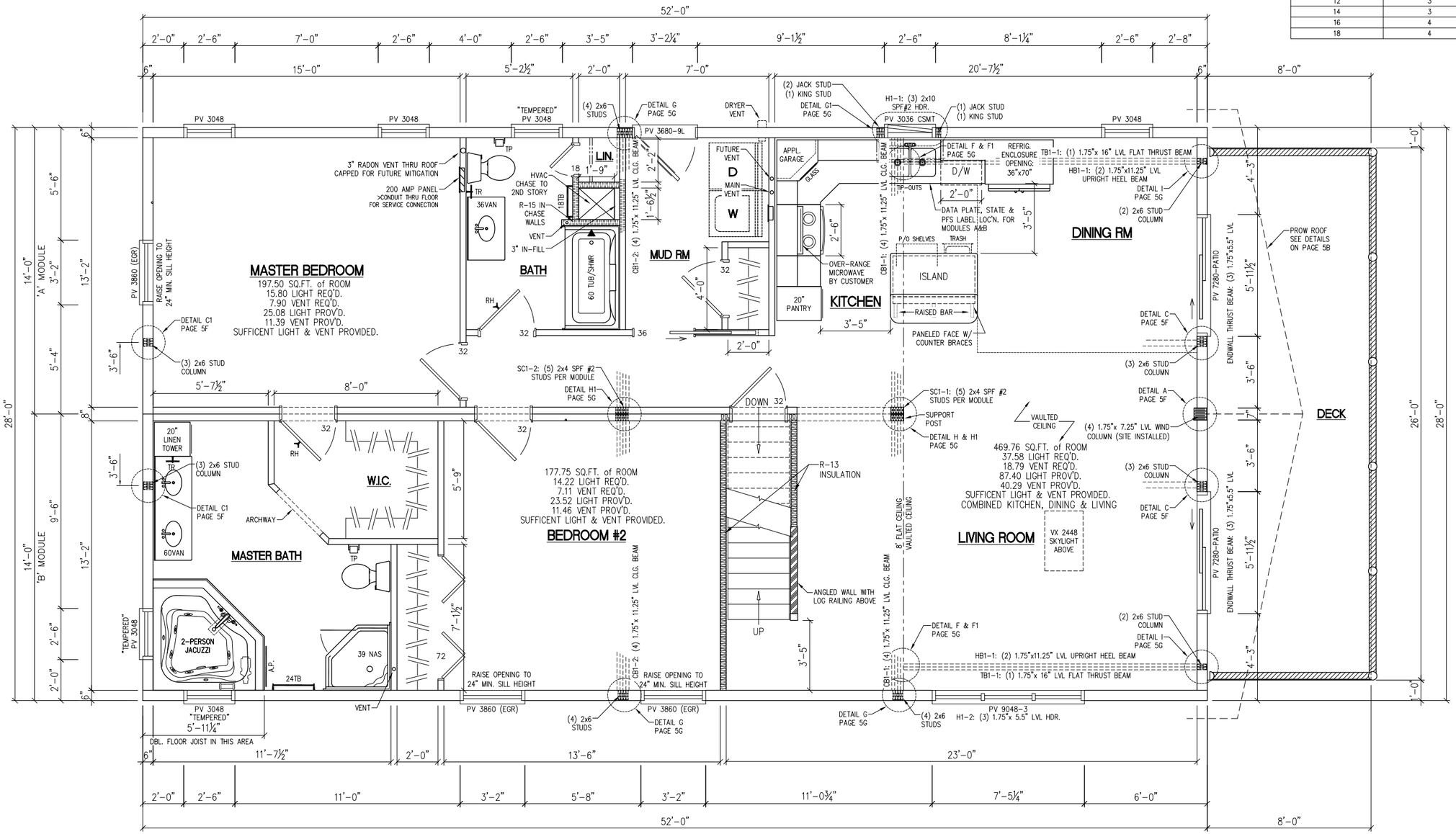

NOTES:
- INSULATE BASEMENT STAIRWELL WALLS
- WEATHER-STRIPPING AND DOOR SWEEP SHALL BE INSTALLED AT STAIRWELL DOOR IF BASEMENT IS UNCONDITIONED (IN FIELD BY OTHERS)

THIS HOUSE HAS BEEN EXTRACTED FROM THE APPROVED SYSTEMS PLAN ON FILE WITH THE STATE.

THE BOTTOM OF THE CLEAR OPENINGS OF ALL WINDOWS SHALL BE 24" OR MORE ABOVE THE FINISHED FLOOR, AVOIDING THE NEED FOR WINDOW GUARDS AS DESCRIBED BY R312.2

COZY CABINS LLC
455 FARMERSVILLE RD.
NEW HOLLAND, PA 17557
PHONE: 717-354-3278
FAX: 717-354-0015
WWW.MYCOZYCABINS.COM

THESE DRAWINGS HAVE BEEN PREPARED BY GLENCO, INC.

THIS DOCUMENT AND THE SUBJECT MATTER CONTAINED HEREIN IS PROPRIETARY AND MAY NOT BE REPRODUCED WITHOUT WRITTEN PERMISSION
www.glencoinc.com

CUSTOMER/PROJECT:
NICOLE HIDALGO
22 MUSTANG ROAD
LAKE ARIEL, PA 18436

BUILDER:
COZY CABINS, LLC
455 FARMERSVILLE RD.
NEW HOLLAND, PA 17557

REV#	DATE	REVISIONS	BY

DRAWN BY: NKG
DATE: 01/21/21
SCALE: 3/16"=1'-0"
CHECKED BY: LDZ

FILE: CC-729
SQ.FT.: 1,660
STATE: PA
TYPE: CAPE
MODEL: CHALET
DRAWING: 1ST STORY FLOOR PLAN
SHEET: 2

** 2x12 SPF#2 2ND STORY FLOOR JOISTS @ 24" O.C.
** 10/12 ENGINEERED TRUSS ROOF SYSTEM @ 24" O.C.

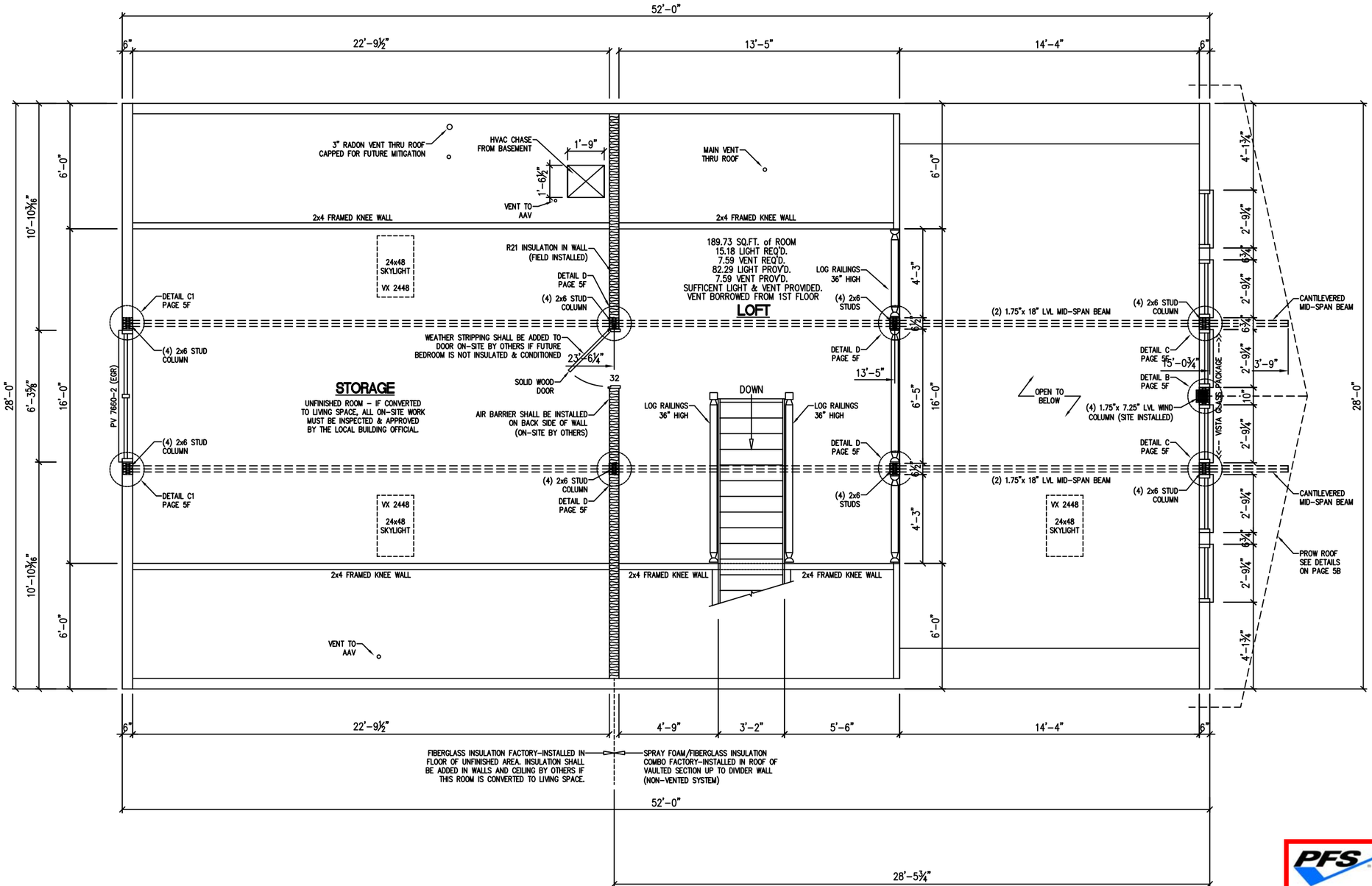

NOTES:

- INSULATE WALL BETWEEN LOFT & STORAGE RM. (IN FIELD BY OTHERS)
- WEATHER-STRIPPING SHALL BE INSTALLED AT STORAGE ROOM DOOR IF ROOM IS UNCONDITIONED (IN FIELD BY OTHERS)

PFS APPROVED
DATE 3/23/21
PFS CORPORATION
Bloomsburg, PA

COZY CABINS LLC
455 FARMERSVILLE RD.
NEW HOLLAND, PA 17557
PHONE: 717-354-3278
FAX: 717-354-0015
WWW.MYCOZYCABINS.COM

THESE DRAWINGS HAVE BEEN PREPARED BY GLENCO, INC.

THIS DOCUMENT AND THE SUBJECT MATTER CONTAINED HEREIN IS PROPRIETARY AND MAY NOT BE REPRODUCED WITHOUT WRITTEN PERMISSION
www.glencoinc.com

CUSTOMER/PROJECT: NICOLE HIDALGO, 22 MUSTANG ROAD, LAKE ARIEL, PA 18436
BUILDER: COZY CABINS, LLC, 455 FARMERSVILLE RD., NEW HOLLAND, PA 17557

REV#	DATE	REVISIONS	BY

DRAWN BY: NKG
DATE: 01/21/21
SCALE: 3/16"=1'-0"
CHECKED BY: LDZ

FILE: CC-729
SQ.FT.: 1,660
STATE: PA
TYPE: CAPE
MODEL: CHALET
DRAWING: 2ND STORY FLOOR PLAN
SHEET: 2A

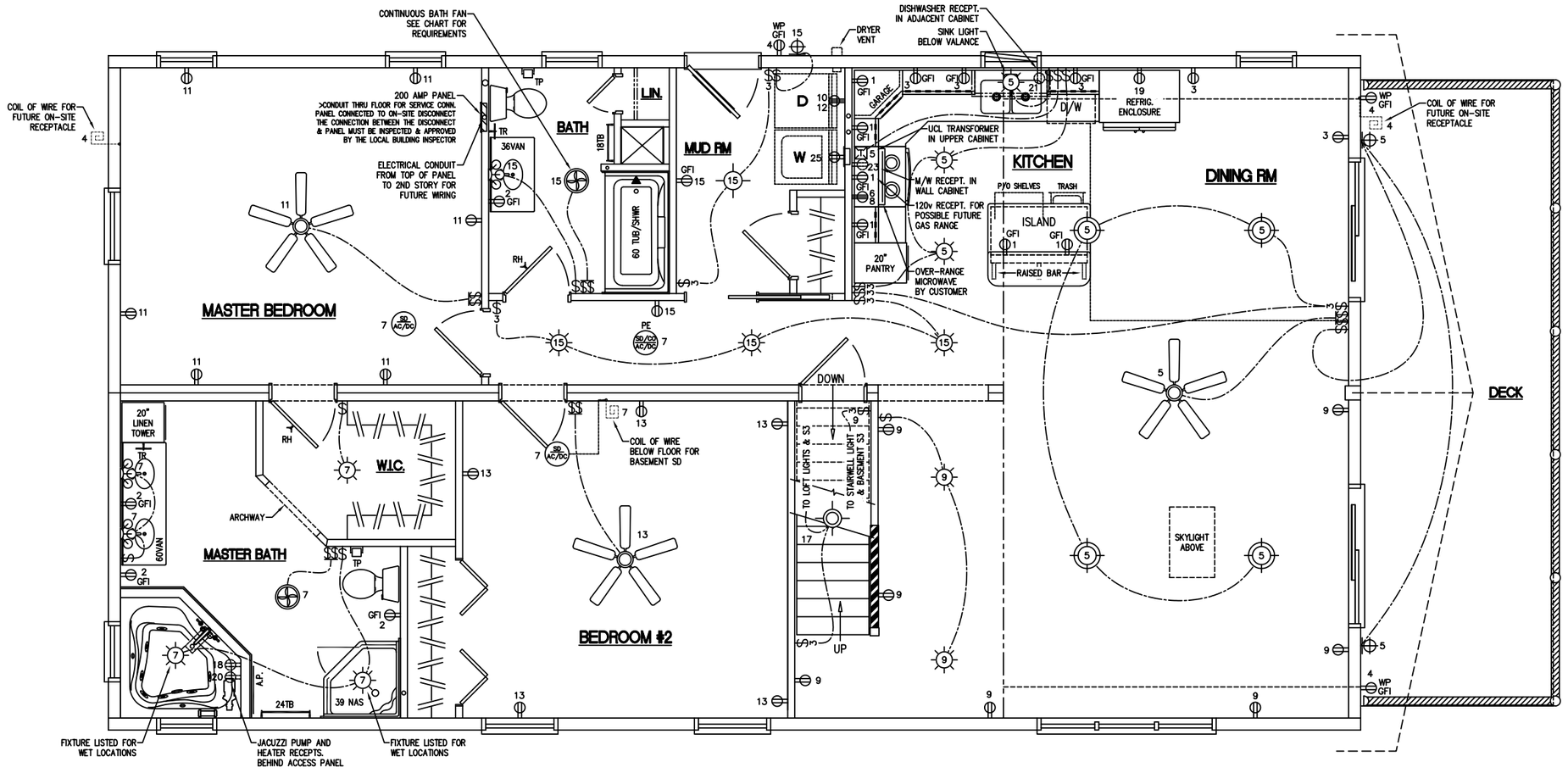

WHOLE HOUSE MECHANICAL VENTILATION 2015 IRC SECTION M1507

NUMBER OF BEDROOMS: 2
FLOOR AREA: 1,456 SQ. FT.
AIR FLOW PROVIDED: 85.5 CFM
AIR FLOW REQUIRED: 45 CFM
MAX 110 CFM (VIA WALL SWITCH) PROVIDES THE ADDITIONAL 50 CFM REQUIRED FOR BATHROOM EXHAUST

PFS APPROVED
DATE 3/23/21
PFS CORPORATION
Bloomsburg, PA

ELECTRIC SYMBOLS

- SINGLE RECEPTACLE
- DUPLEX RECEPTACLE
- WATERPROOF RECEP. w/GFI
- GROUND-FAULT INTER.
- 220 VOLT RECEPTACLE
- TOP HOT & BOT. SWITCHED
- SINGLE POLE SWITCH
- THREE WAY SWITCH
- CEILING LIGHT
- THIN LED CEILING LIGHT
- MINI PENDANT LIGHT
- CATHEDRAL PENDANT LIGHT
- RECESSED LIGHT
- EXHAUST FAN/LIGHT
- INT. OR EXT. WALL LIGHT
- CEILING FAN / LIGHT
- FLUORESCENT LIGHT
- RANGE EXHAUST HOOD
- SMOKE DETECTOR
- CO/SMOKE DETECTOR
- JUNCTION BOX
- AMP CONNECTS
- SPECIAL APPLIANCE
- FLOOD LIGHT
- THERMOSTAT
- PHONE JACK
- TV JACK
- VANITY LIGHT
- PULL-CHAIN WALL LIGHT

2014 NEC ELECTRICAL NOTES:

1. AN ARC-FAULT BREAKER IS REQUIRED FOR ALL 15 AND 20 AMP CIRCUITS SUPPLYING OUTLETS INSTALLED IN THE DWELLING UNIT EXCEPT THOSE IN BATHROOMS, UNFINISHED BASEMENTS, GARAGES, OUTDOORS, OR OTHER SIMILAR AREAS. (NEC 210.12B)
2. A GFCI BREAKER OR RECEPTACLE IS REQUIRED (BUT NOT LIMITED TO) ALL CIRCUITS SERVING KITCHEN COUNTERTOP RECEPTACLES, BATHROOMS, LAUNDRIES, AND DISHWASHERS. (NEC 210.8)
3. A GFCI BREAKER OR RECEPTACLE IS REQUIRED (BUT NOT LIMITED TO) ALL CIRCUITS WITHIN 6' OF ANY SINK (NEC 210.8)
4. AN EXTERIOR WEATHER PROOF RECEPTACLE IS REQUIRED TO BE LOCATED AT BOTH THE FRONT & REAR (AT GRADE LEVEL) OF ALL DWELLING UNITS. (NEC 210.52) AN EXTERIOR WEATHER PROOF RECEPTACLE IS REQUIRED TO BE LOCATED AT ALL PORCHES, STOOPS, PATIOS, AND DECKS AND SHALL BE ACCESSIBLE FROM GRADE LEVEL.
5. ALL RECEPTACLES IN DWELLING UNITS ARE TO BE TAMPER RESISTANT.
6. INTERIOR LOCATION OF ELECTRICAL PANEL REQUIRES A DISCONNECT INSTALLED AT THE POINT OF ENTRANCE NEAREST THE SERVICE CONDUCTORS.
7. A NEUTRAL CONDUCTOR SHALL BE PROVIDED IN EVERY SWITCH BOX
8. ALL LIGHTING CEILING OUTLETS MUST BE RATED FOR 50#
9. WATER HEATER ON-SITE BY OTHERS

200 AMP CIRCUIT SCHEDULE

*WIRE WITH GROUND ALL CIRCUITS

CRT	TYP	BRK	WIRE	LOCATION	VOLT	CRT	TYP	BRK	WIRE	LOCATION	VOLT
1	AFI	20A	12-2	APPL.-KITCHEN	120	2	-	20A	12-2	BATH RECPT.	120
3	AFI	20A	12-2	APPL.-KIT/DIN	120	4	-	20A	12-2	EXTERIOR RECPT.	120
5	AFI	15A	14-2	GENERAL LIGHTS	120	6	-	40A	8-3	ELECTRIC RANGE	240
7	AFI	15A	14-2	LIGHTS & SD	120	8					
9	AFI	15A	14-2	LIVING ROOM	120	10	-	30A	10-3	ELECTRIC DRYER	240
11	AFI	15A	14-2	MASTER BEDROOM	120	12					
13	AFI	15A	14-2	BEDROOM #2	120	14	-	30A	10-2	ELECTRIC WATER HEATER	240
15	AFI	15A	14-2	MUDRM/HALL/LIGHTS	120	16					
17	AFI	15A	14-2	LOFT	120	18	AFI/GFI	15A	14-2	JACUZZI PUMP	120
19	AFI/GFI	20A	12-2	REFRIGERATOR	120	20	AFI/GFI	15A	14-2	JACUZZI HEATER	120
21	AFI/GFI	20A	12-2	DISHWASHER	120	22	-	20A	12-2	KITCHEN BASEBOARD HEAT	240
23	AFI/GFI	20A	12-2	MICROWAVE	120	24					
25	AFI/GFI	20A	12-2	WASHER	120	26	-	20A	12-2	LIVING ROOM BASEBOARD HEAT	240
27						28					
29						30	-	20A	12-2	LIVING ROOM BASEBOARD HEAT	240
31						32					
33						34	-	20A	12-2	M.BDRM/BATH/MUD RM BASEBOARD HEAT	240
35						36					
37						38	-	20A	12-2	BDRM#2/MSTR.BATH BASEBOARD HEAT	240
39						40					

COZY CABINS LLC
455 FARMERSVILLE RD.
NEW HOLLAND, PA 17557
PHONE: 717-354-3278
FAX: 717-354-0015
WWW.MYCOZYCABINS.COM

THESE DRAWINGS HAVE BEEN PREPARED BY GLENCO, INC.

THIS DOCUMENT AND THE SUBJECT MATTER CONTAINED HEREIN IS PROPRIETARY AND MAY NOT BE REPRODUCED WITHOUT WRITTEN PERMISSION
www.glencoinc.com

CUSTOMER/PROJECT: NICOLE HIDALGO
22 MUSTANG ROAD
LAKE ARIEL, PA 18436

BUILDER: COZY CABINS, LLC
455 FARMERSVILLE RD.
NEW HOLLAND, PA 17557

REV#	DATE	REVISIONS	BY

DRAWN BY: NKG
DATE: 01/21/21
SCALE: 3/16"=1'-0"
CHECKED BY: LDZ

FILE: CC-729
SQ.FT.: 1,660
STATE: PA
TYPE: CAPE
MODEL: CHALET
DRAWING: 1ST STORY ELECTRICAL PLAN
SHEET: 3

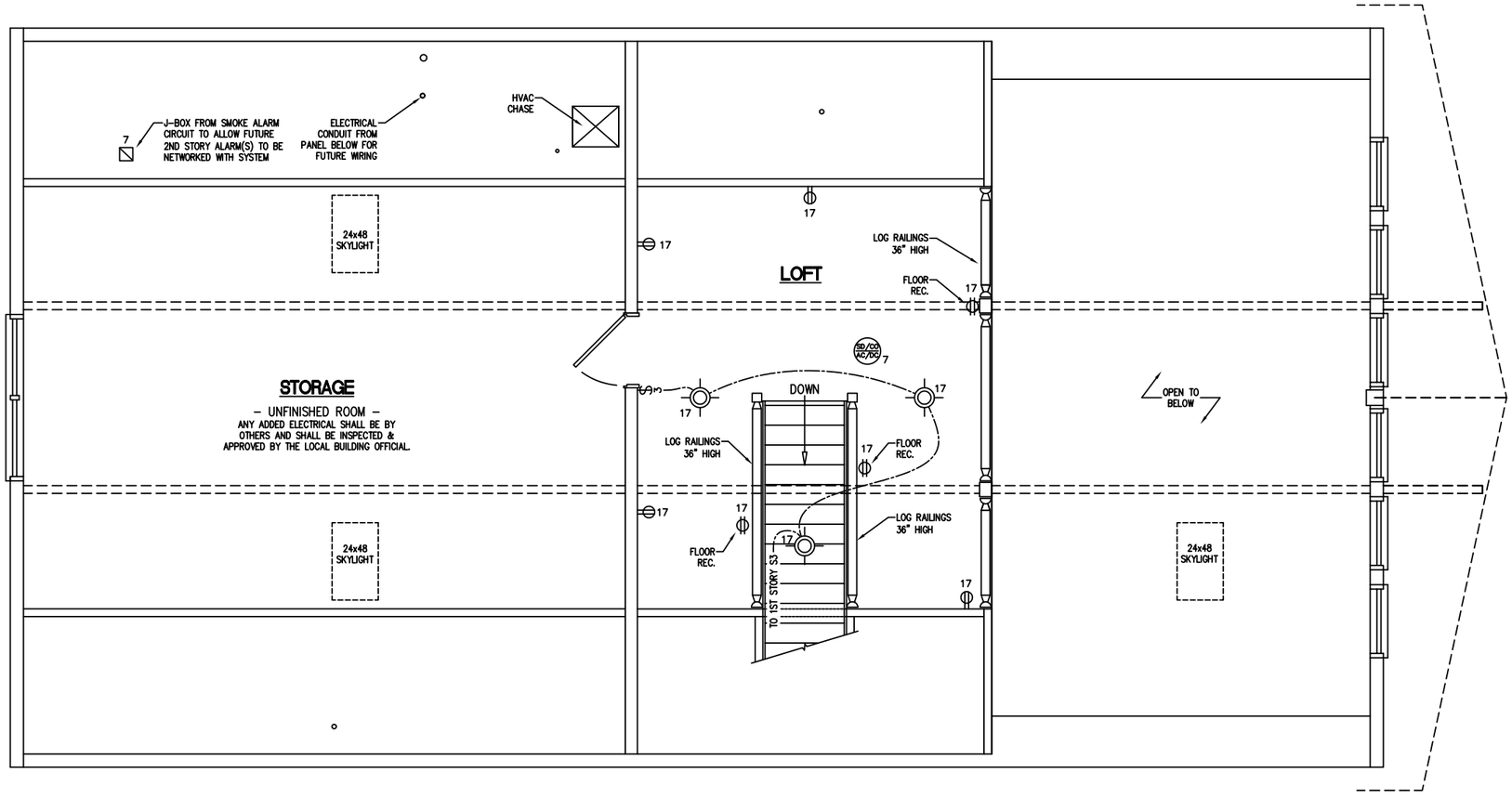

ELECTRIC SYMBOLS

- SINGLE RECEPTACLE
- DUPLEX RECEPTACLE
- WATERPROOF RECEP. w/GFI
- GROUND–FAULT INTER.
- 220 VOLT RECEPTACLE
- TOP HOT & BOT. SWITCHED
- SINGLE POLE SWITCH
- THREE WAY SWITCH
- CEILING LIGHT
- THIN LED CEILING LIGHT
- MINI PENDANT LIGHT
- CATHEDRAL PENDANT LIGHT
- RECESSED LIGHT
- EXHAUST FAN/LIGHT
- INT. OR EXT. WALL LIGHT
- CEILING FAN / LIGHT
- FLUORESCENT LIGHT
- RANGE EXHAUST HOOD
- SMOKE DETECTOR
- CO/SMOKE DETECTOR
- JUNCTION BOX
- AMP CONNECTS
- SPECIAL APPLIANCE
- FLOOD LIGHT
- THERMOSTAT
- PHONE JACK
- TV JACK
- VANITY LIGHT
- PULL–CHAIN WALL LIGHT

PFS **APPROVED**
DATE 3/23/21
PFS CORPORATION
Bloomsburg, PA

COZY CABINS LLC
455 FARMERSVILLE RD.
NEW HOLLAND, PA 17557
PHONE: 717-354-3278
FAX: 717-354-0015
WWW.MYCOZYCABINS.COM

THESE DRAWINGS HAVE BEEN PREPARED BY
GLENCO, INC.

THIS DOCUMENT AND THE SUBJECT MATTER CONTAINED HEREIN IS PROPRIETARY AND MAY NOT BE REPRODUCED WITHOUT WRITTEN PERMISSION
www.glencoinc.com

CUSTOMER/PROJECT:
NICOLE HIDALGO
22 MUSTANG ROAD
LAKE ARIEL, PA 18436

BUILDER:
COZY CABINS, LLC
455 FARMERSVILLE RD.
NEW HOLLAND, PA 17557

REV#	DATE	REVISIONS	DATE:	SCALE:	CHECKED BY:	BY
			01/21/21	3/16"=1'-0"	LDZ	

DRAWN BY: NKG

FILE: CC–729
SQ.FT.: 1,660
STATE: PA
TYPE: CAPE
MODEL: CHALET
DRAWING: 2ND STORY ELECTRICAL PLAN
SHEET: 3A

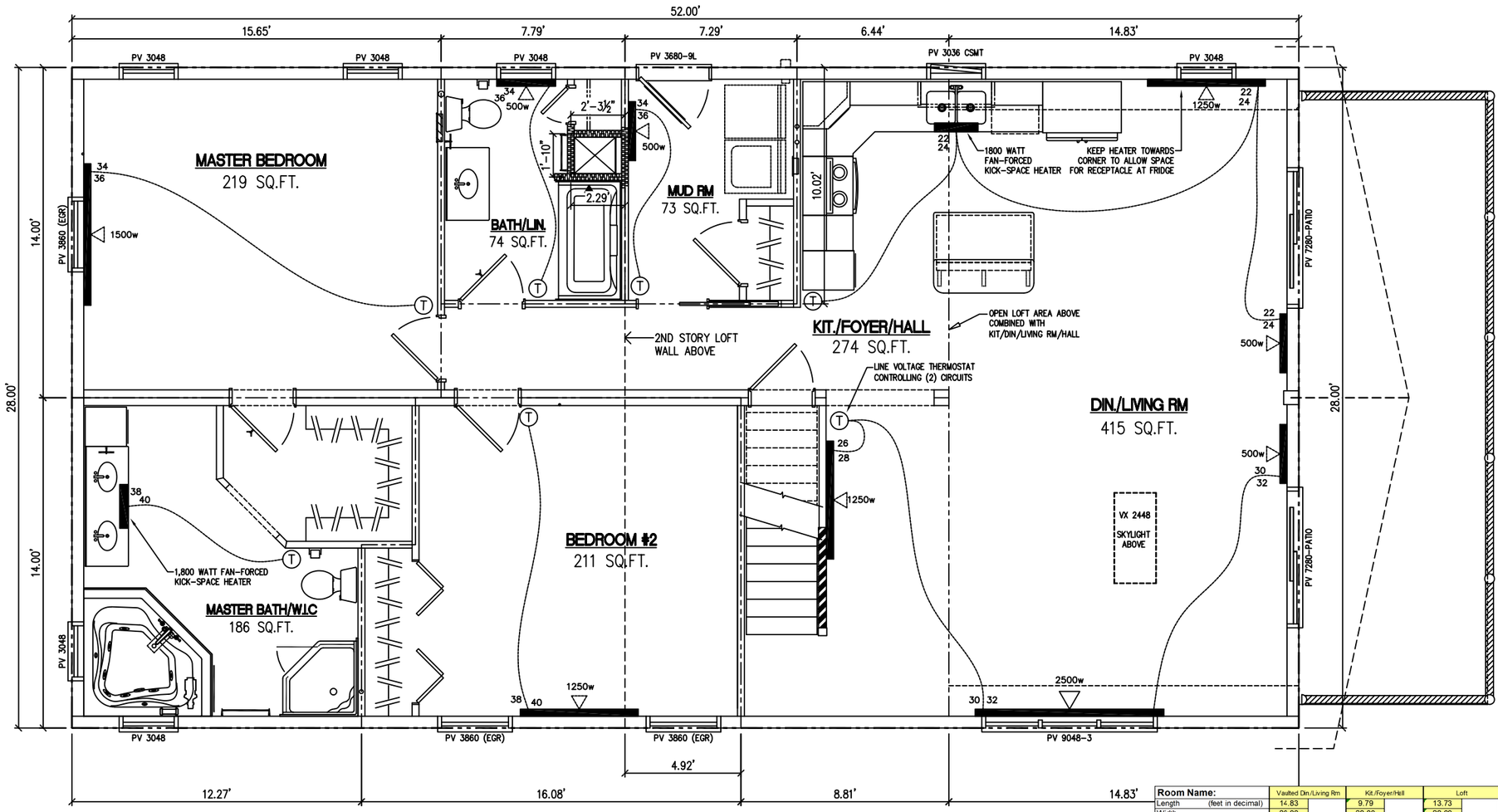

HEATING SYSTEM NOTES:

- ELECTRIC BASEBOARD HEAT (FACTORY INSTALLED)
- TOTAL BTU HEAT LOSS = 41,005

Room Name:	Vaulted Din./Living Rm		Kit./Foyer/Hall		Loft		Master Bedroom		Master Bath		Bedroom #2		Mud Room		Bath	
Length (feet in decimal)	14.83		9.79		13.73		15.65		13.29		15.67		7.29		7.79	
Width	28.00		28.00		28.00		14.00		14.00		14.00		10.02		9.50	
Exterior Wall length	57.66		15.25		55.46		29.65		26.27		16.08		7.29		7.79	
Ceiling Height	15.40		8.10		7.30		8.10		8.10		8.10		8.10		8.10	
	Area	Loss (UxA)	Area	Loss (UxA)	Area	Loss (UxA)	Area	Loss (UxA)	Area	Loss (UxA)	Area	Loss (UxA)	Area	Loss (UxA)	Area	Loss (UxA)
Windows (U value)																
0.26	47.3	12.3		0.0		0.0	35.8	9.3	20.0	5.2	31.7	8.2		0.0	10.0	2.6
0.28	78.4	22.0		0.0		0.0		0.0		0.0		0.0		0.0		0.0
0.41	6.7	2.8		0.0		0.0		0.0		0.0		0.0		0.0		0.0
Doors (U value)																
0.19		0.0		0.0		0.0		0.0		0.0		0.0	21.8	4.1		0.0
0.25	79.4	19.9		0.0		0.0		0.0		0.0		0.0		0.0		0.0
0.5		0.0		0.0	21.8	10.9		0.0		0.0		0.0		0.0		0.0
0.00		0.0		0.0		0.0		0.0		0.0		0.0		0.0		0.0
Ext Walls (U value)																
0.048	676.184	32.5	123.525	5.9	383.058	18.4	204.335	9.8	192.787	9.3	98.588	4.7	37.249	1.8	53.099	2.5
0	0	0.0	0	0.0	0	0.0	0	0.0	0	0.0	0	0.0	0	0.0	0	0.0
Floors (U value)																
0.034	415.24	14.1	274	9.3	0	0.0	219.1	7.4	166	6.3	211	7.2	73	2.5	74	2.5
0	0	0.0	0	0.0	0	0.0	0	0.0	0	0.0	0	0.0	0	0.0	0	0.0
Ceiling (U value)																
0.021	415.24	8.7	0	0.0	384.44	8.1	0	0.0	0	0.0	0	0.0	0.0	0.0	0	0.0
0.028	0	0.0	31	0.9	0	0.0	219	6.1	166	5.2	142	4.0	0	0.0	74	2.1
Infiltration	Volume		Volume		Volume		Volume		Volume		Volume		Volume		Volume	
0.016	6394.696	102	2219.4	36	2806.412	45	1774.71	28	1506.6	24	1709.1	27	591.671	9	599.4	10
Total (U x A)		214		52		82		61		50		51		18		19
Design Temp	68	**16,041**		**3,861**		**6,153**										
Heat Loss (UxAxT)	→		→		Combined BTU Req	**26,056**	BTU Recuired	**4,571**	BTU Required	**3,747**	BTU Required	**3,849**	BTU Recuired	**1,337**	BTU Required	**1,446**
					Qty	Model	Qty	Model	Qty	Model	Qty	Model	Qty	Model	Qty	Model
Electric Baseboard					1	TKH1800	1	1500	1	TKH1800	1	1250	1	500	1	500
					1	2500										
					2	1250										
					2	500										
Total BTU Loss					BTU Provided	**26,615**	BTU Provided	**5,118**	BTU Provided	**6,142**	BTU Provided	**4,265**	BTU Provided	**1,706**	BTU Provided	**1,706**

Model	500	750	1000	1250	1500	2000	2500	TKH900	TKH1800
Watts	500	750	1000	1250	1500	2000	2500	900	1800
BTU	1705	2559	3412	4265	5118	6824	8530	3071	6142

41,005

PFS **APPROVED**
DATE 3/23/21
PFS CORPORATION
Bloomsburg, PA

COZY CABINS LLC
455 FARMERSVILLE RD
NEW HOLLAND, PA 17557
PHONE: 717-354-3278
FAX: 717-354-0015
WWW.MYCOZYCABINS.COM

Cozy Cabins LLC

THESE DRAWINGS HAVE BEEN PREPARED BY **GLENCO, INC.**

THIS DOCUMENT AND THE SUBJECT MATTER CONTAINED HEREIN IS PROPRIETARY AND MAY NOT BE REPRODUCED WITHOUT WRITTEN PERMISSION
www.glencoinc.com

CUSTOMER/PROJECT:
NICOLE HIDALGO
22 MUSTANG ROAD
LAKE ARIEL, PA 18436

BUILDER:
COZY CABINS, LLC
455 FARMERSVILLE RD.
NEW HOLLAND, PA 17557

REV#	DATE	REVISIONS	BY

DRAWN BY: NKG
DATE: 01/21/21
SCALE: 3/16"=1'-0"
CHECKED BY: LDZ

FILE: CC-729
SQ.FT.: 1,660
STATE: PA
TYPE: CAPE
MODEL: CHALET
DRAWING: ELECTRIC BASEBOARD HEAT
SHEET: 3B

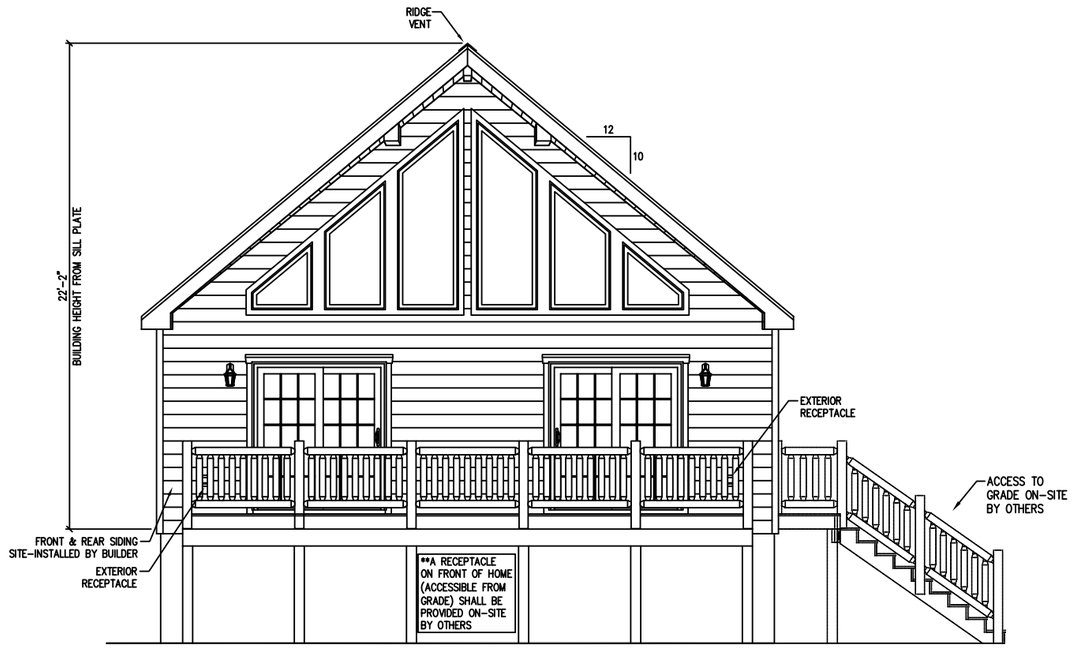

FRONT ELEVATION

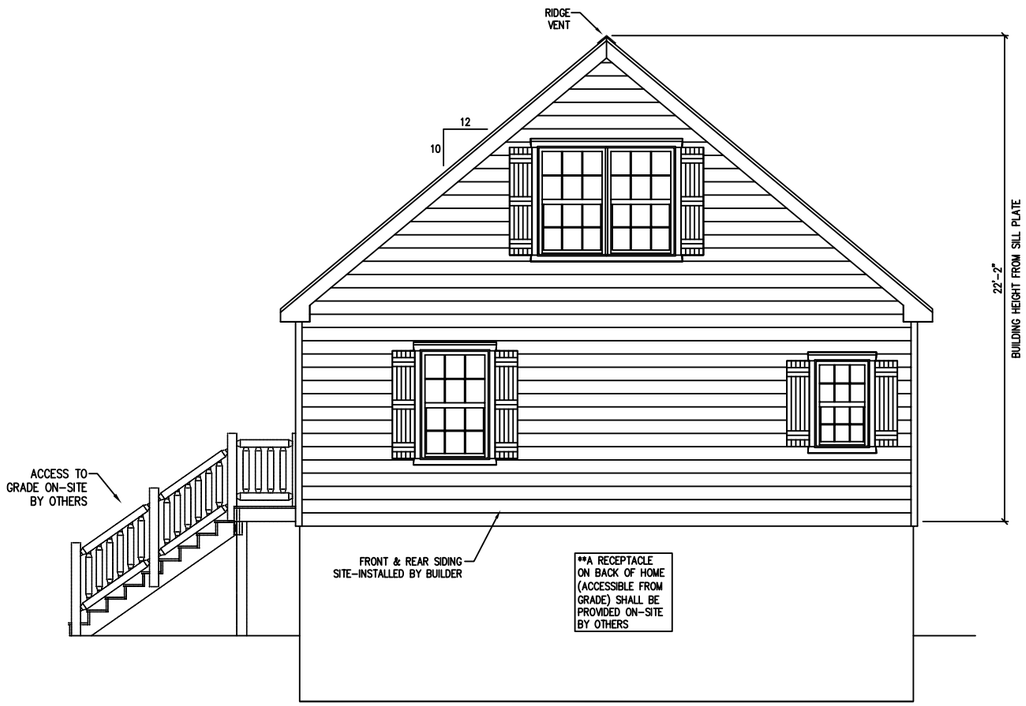

REAR ELEVATION

NOTES:
1. ELEVATION DRAWINGS ARE APPROXIMATE.
2. CORROSION RESISTANT FLASHING AT TOP AND SIDE OF DOORS, WINDOWS, AND AT ROOF PENETRATIONS.
3. GUTTERS, LEADERS, AND SPLASH BLOCKS FURNISHED AND INSTALLED BY OTHERS ON SITE.

PFS APPROVED
DATE 3/23/21
PFS CORPORATION
Bloomsburg, PA

COZY CABINS LLC
455 FARMERSVILLE RD.
NEW HOLLAND, PA 17557
PHONE: 717-354-3278
FAX: 717-354-0015
WWW.MYCOZYCABINS.COM

THESE DRAWINGS HAVE BEEN PREPARED BY
GLENCO, INC.

THIS DOCUMENT AND THE SUBJECT MATTER CONTAINED HEREIN IS PROPRIETARY AND MAY NOT BE REPRODUCED WITHOUT WRITTEN PERMISSION
www.glencoinc.com

CUSTOMER/PROJECT:
NICOLE HIDALGO
22 MUSTANG ROAD
LAKE ARIEL, PA 18436

BUILDER:
COZY CABINS, LLC
455 FARMERSVILLE RD.
NEW HOLLAND, PA 17557

REV#	DATE	REVISIONS	BY

DRAWN BY: NKG
DATE: 01/21/21
SCALE: NTS
CHECKED BY: LDZ

FILE: CC-729
SQ.FT.: 1,660
STATE: PA
TYPE: CAPE
MODEL: CHALET
DRAWING: FRONT & REAR ELEVATIONS
SHEET: 4

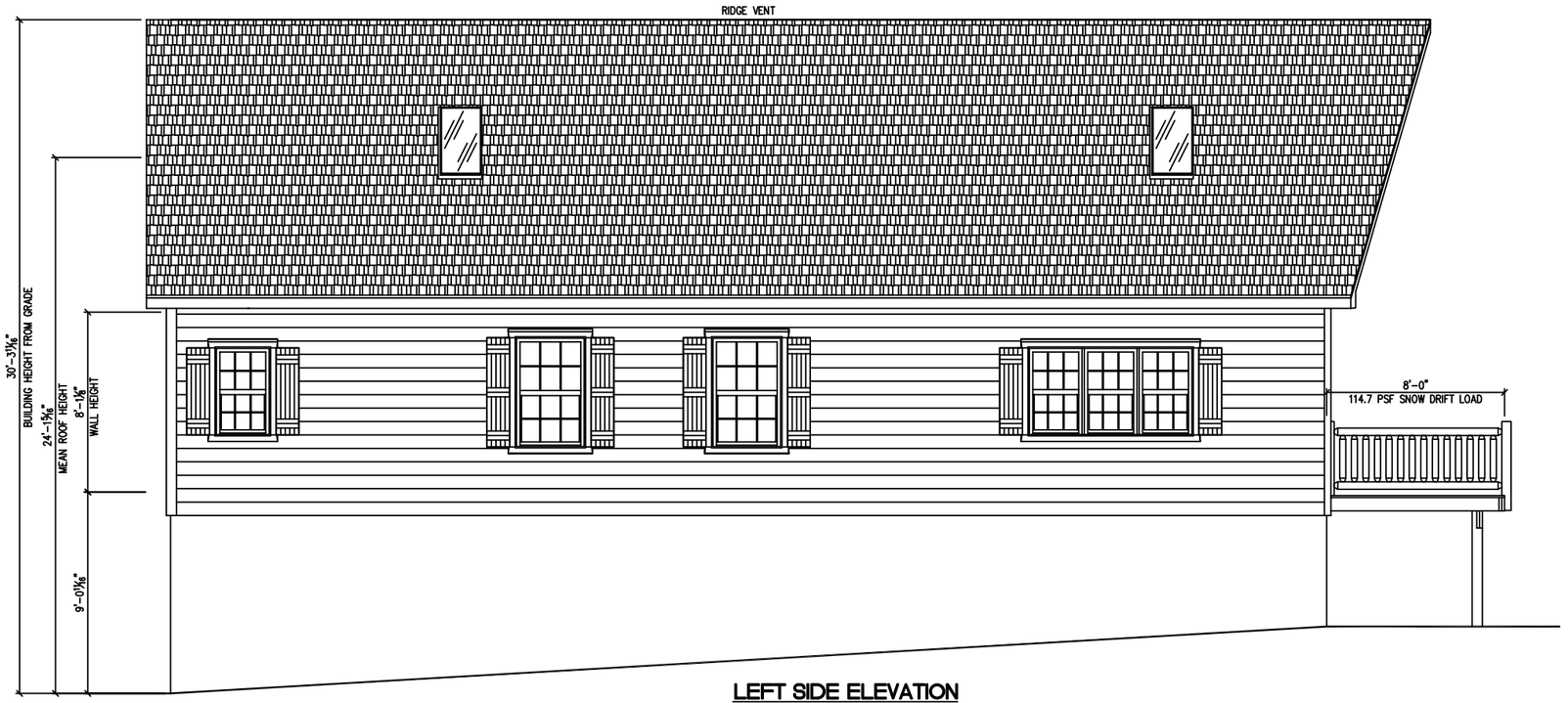

LEFT SIDE ELEVATION

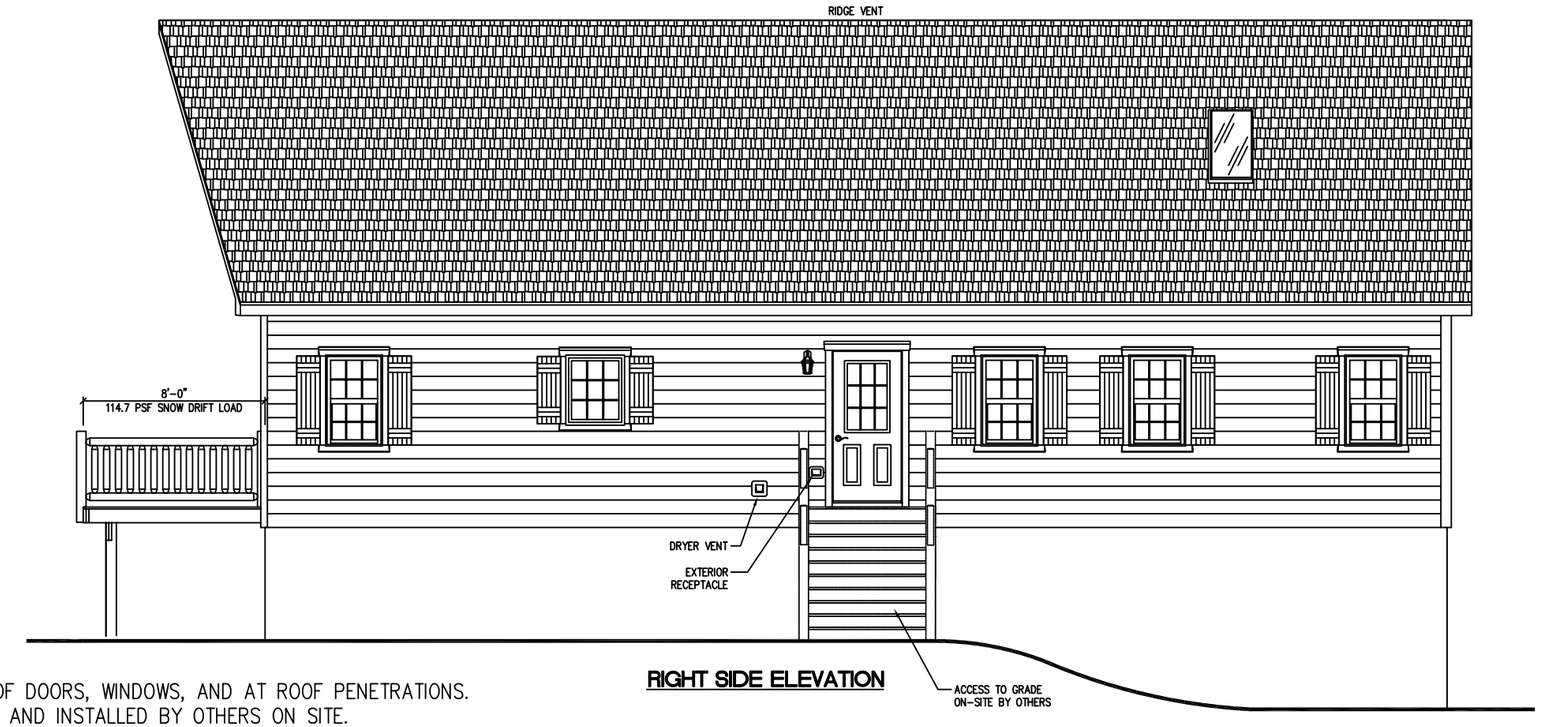

RIGHT SIDE ELEVATION

NOTES:

1. ELEVATION DRAWINGS ARE APPROXIMATE.
2. CORROSION RESISTANT FLASHING AT TOP AND SIDE OF DOORS, WINDOWS, AND AT ROOF PENETRATIONS.
3. GUTTERS, LEADERS, AND SPLASH BLOCKS FURNISHED AND INSTALLED BY OTHERS ON SITE.

PFS APPROVED
DATE 3/23/21
PFS CORPORATION
Bloomsburg, PA

COZY CABINS LLC
455 FARMERSVILLE RD.
NEW HOLLAND, PA 17557
PHONE: 717-354-3278
FAX: 717-354-0015
WWW.MYCOZYCABINS.COM

Cozy Cabins LLC

THESE DRAWINGS HAVE BEEN PREPARED BY
GLENCO, INC.

THIS DOCUMENT AND THE SUBJECT MATTER CONTAINED HEREIN IS PROPRIETARY AND MAY NOT BE REPRODUCED WITHOUT WRITTEN PERMISSION
www.glencoinc.com

CUSTOMER/PROJECT:
NICOLE HIDALGO
22 MUSTANG ROAD
LAKE ARIEL, PA 18436

BUILDER:
COZY CABINS, LLC
455 FARMERSVILLE RD.
NEW HOLLAND, PA 17557

REV#	DATE	REVISIONS	BY

DRAWN BY: NKG
DATE: 01/21/21
SCALE: 1/8"=1'-0"
CHECKED BY: LDZ

FILE:	CC-729
SQ.FT.:	1,660
STATE:	PA
TYPE:	CAPE
MODEL:	CHALET
DRAWING:	SIDE ELEVATIONS
SHEET:	4A

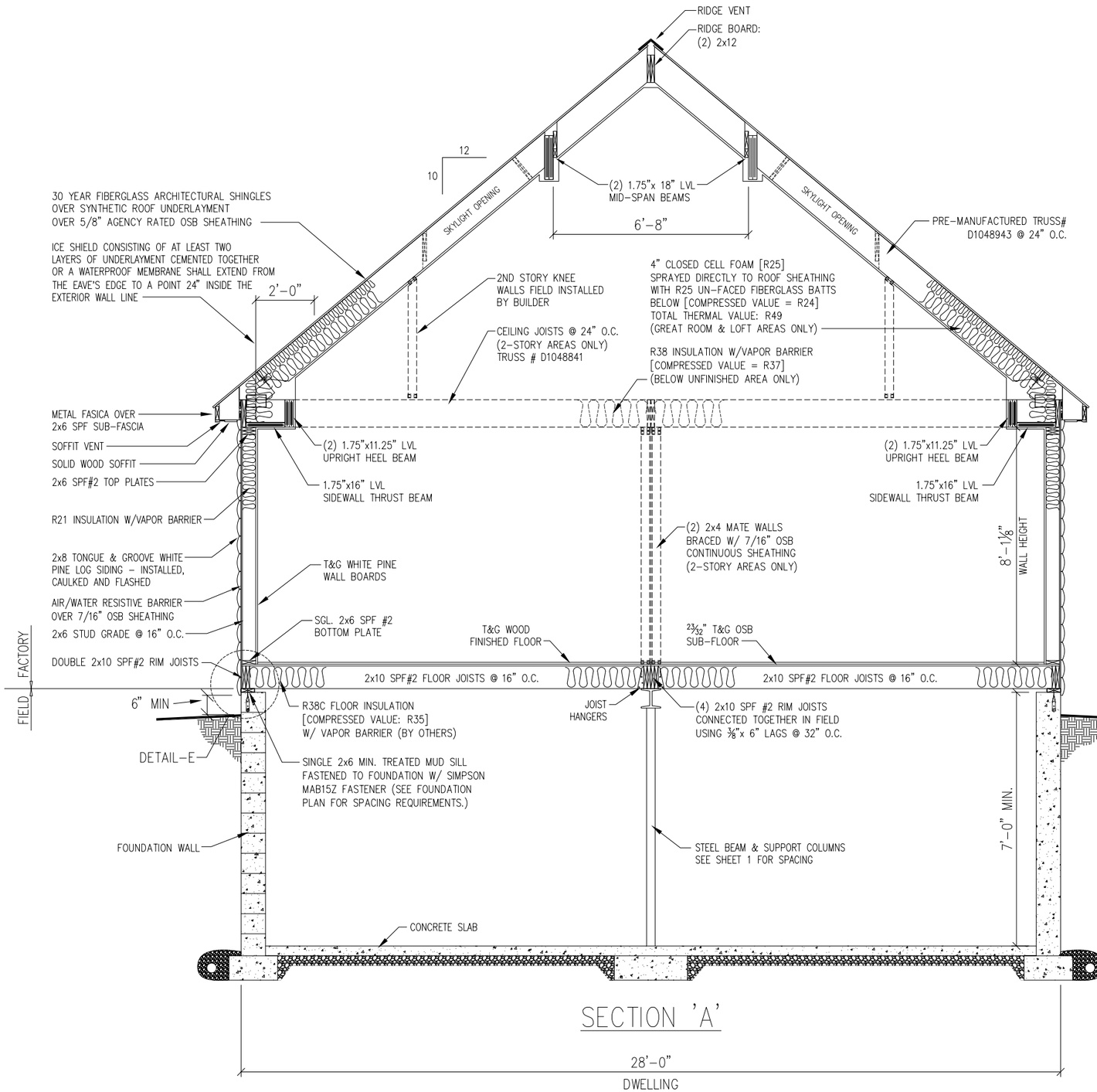

SECTION 'A'

28'-0"
DWELLING

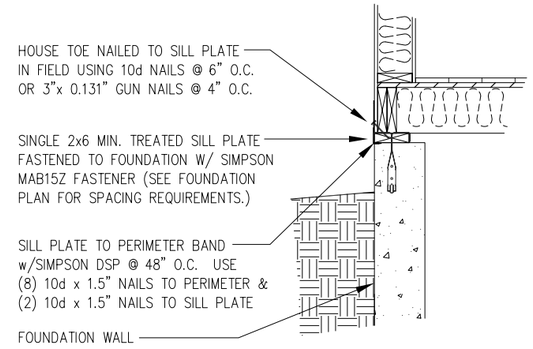

DETAIL "E"

HOUSE TO FOUNDATION CONNECTIONS

NOTES:
1. ALL EXPOSED LUMBER TO BE PRESSURE TREATED OR PRESERVATIVE TREATED
2. ALL EXPOSED CONNECTORS MUST BE CORROSIONS RESISTANT

PFS APPROVED
DATE 3/23/21
PFS CORPORATION
Bloomsburg, PA

COZY CABINS LLC
455 FARMERSVILLE RD.
NEW HOLLAND, PA 17557
PHONE: 717-354-3278
FAX: 717-354-0015
WWW.MYCOZYCABINS.COM

THESE DRAWINGS HAVE BEEN PREPARED BY GLENCO, INC.

THIS DOCUMENT AND THE SUBJECT MATTER CONTAINED HEREIN IS PROPRIETARY AND MAY NOT BE REPRODUCED WITHOUT WRITTEN PERMISSION
www.glencoinc.com

CUSTOMER/PROJECT: NICOLE HIDALGO
22 MUSTANG ROAD
LAKE ARIEL, PA 18436

BUILDER: COZY CABINS, LLC
455 FARMERSVILLE RD.
NEW HOLLAND, PA 17557

REV#	DATE	REVISIONS	BY

DRAWN BY: NKG
DATE: 01/21/21
SCALE: 1/4"=1'-0"
CHECKED BY: LDZ

FILE: CC-729
SQ.FT.: 1,660
STATE: PA
TYPE: CAPE
MODEL: CHALET
DRAWING: CROSS SECTION
SHEET: 5

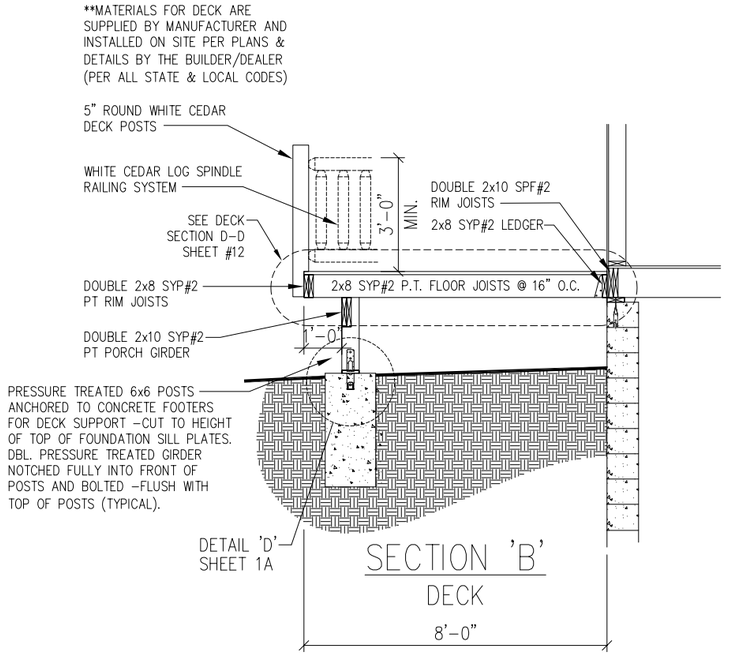

NOTES:
1. ALL EXPOSED LUMBER TO BE PRESSURE TREATED OR PRESERVATIVE TREATED
2. ALL EXPOSED CONNECTORS MUST BE CORROSIONS RESISTANT

PFS APPROVED
DATE 3/23/21
PFS CORPORATION
Bloomsburg, PA

COZY CABINS LLC
455 FARMERSVILLE RD.
NEW HOLLAND, PA 17557
PHONE: 717-354-3278
FAX: 717-354-0015
WWW.MYCOZYCABINS.COM

THESE DRAWINGS HAVE BEEN PREPARED BY
GLENCO, INC.

THIS DOCUMENT AND THE SUBJECT MATTER CONTAINED HEREIN IS PROPRIETARY AND MAY NOT BE REPRODUCED WITHOUT WRITTEN PERMISSION
www.glencoinc.com

CUSTOMER/PROJECT:
NICOLE HIDALGO
22 MUSTANG ROAD
LAKE ARIEL, PA 18436

BUILDER:
COZY CABINS, LLC
455 FARMERSVILLE RD.
NEW HOLLAND, PA 17557

REV#	DATE	REVISIONS	BY

DRAWN BY: NKG
DATE: 01/21/21
SCALE: 1/4"=1'-0"
CHECKED BY: LDZ

FILE: CC-729
SQ.FT.: 1,660
STATE: PA
TYPE: CAPE
MODEL: CHALET
DRAWING: CROSS SECTION
SHEET: 5A

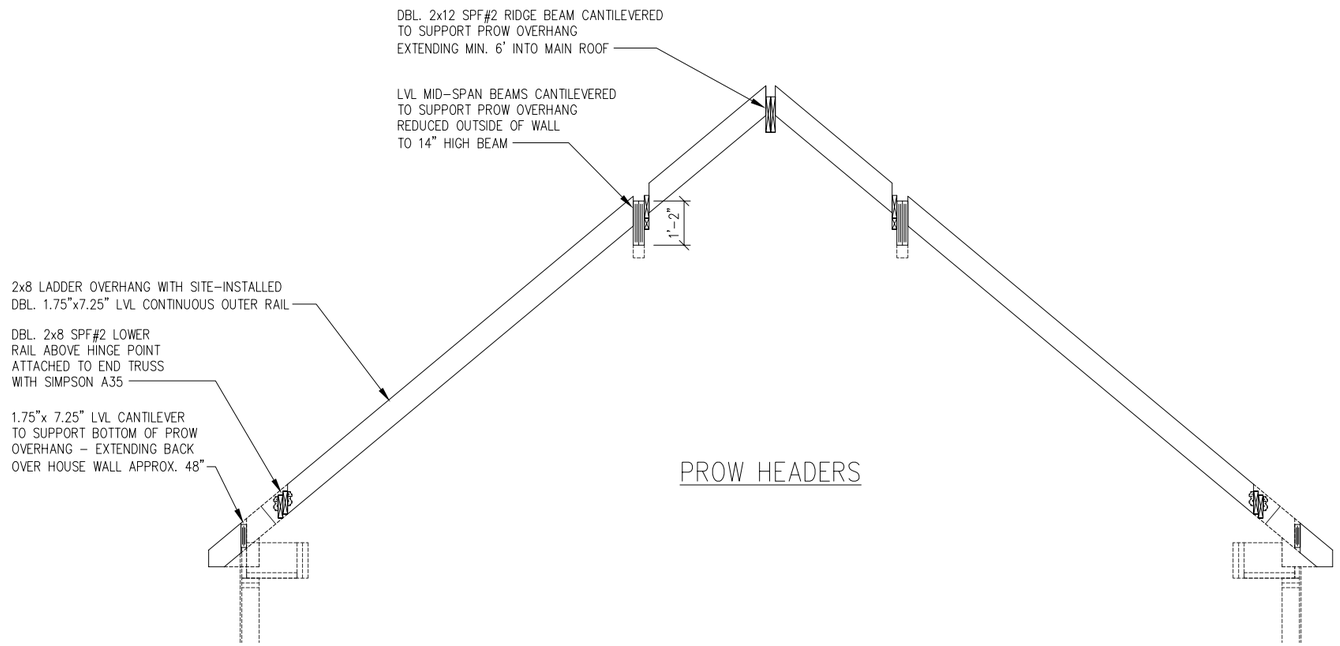

PROW HEADERS

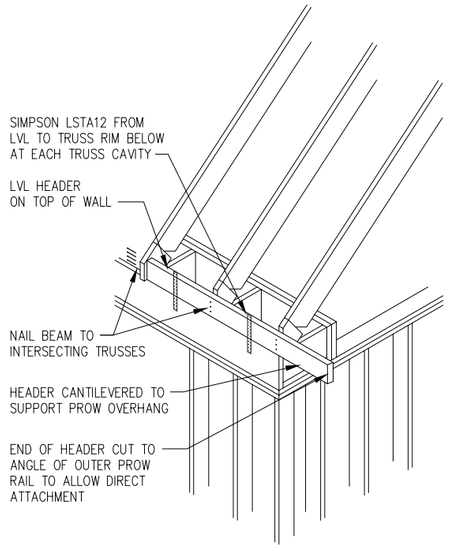

LOWER CANTILEVER HEADER DETAIL

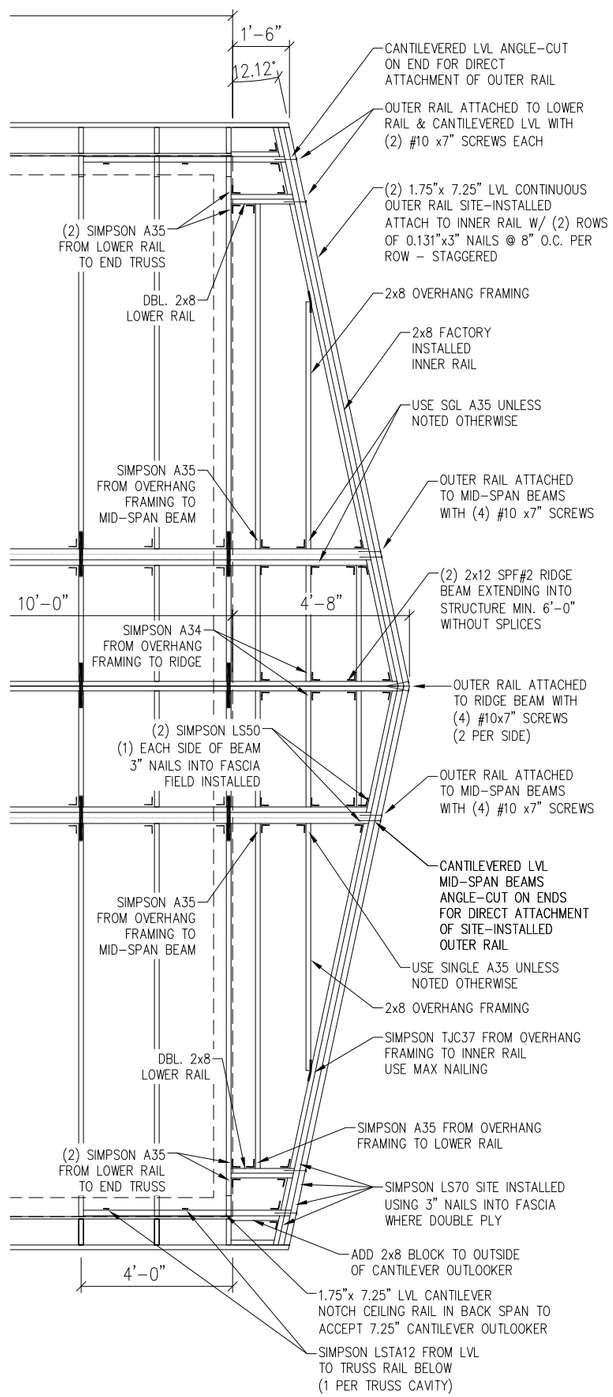

PFS APPROVED
DATE 3/23/21
PFS CORPORATION
Bloomsburg, PA

COZY CABINS LLC
455 FARMERSVILLE RD.
NEW HOLLAND, PA 17557
PHONE: 717-354-3278
FAX: 717-354-0015
WWW.MYCOZYCABINS.COM

THESE DRAWINGS HAVE BEEN PREPARED BY
GLENCO, INC.

THIS DOCUMENT AND THE SUBJECT MATTER CONTAINED HEREIN IS PROPRIETARY AND MAY NOT BE REPRODUCED WITHOUT WRITTEN PERMISSION
www.glencoinc.com

CUSTOMER/PROJECT:
NICOLE HIDALGO
22 MUSTANG ROAD
LAKE ARIEL, PA 18436

BUILDER:
COZY CABINS, LLC
455 FARMERSVILLE RD.
NEW HOLLAND, PA 17557

REV#	DATE	REVISIONS	BY

DRAWN BY: NKG
DATE: 01/21/21
SCALE: 1/4"=1'-0"
CHECKED BY: LDZ

FILE: CC-729
SQ.FT.: 1,660
STATE: PA
TYPE: CAPE
MODEL: CHALET
DRAWING: PROW ROOF DETAIL
SHEET: 5B

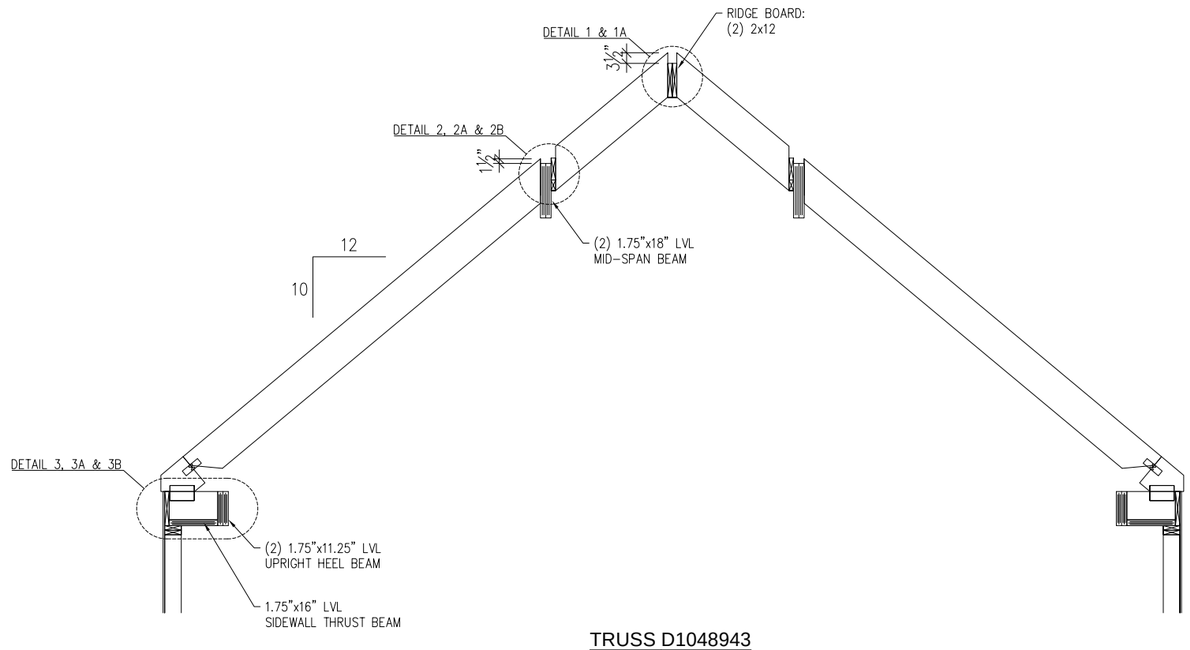

TRUSS D1048943

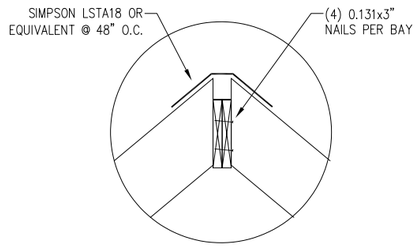

DETAIL 1
RIDGE BOARD TO RIDGE BOARD ON-SITE

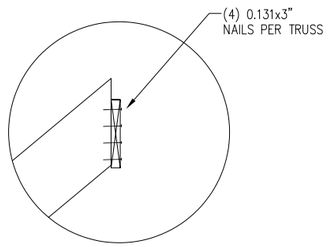

DETAIL 1A
RIDGE BOARD TO TRUSS TOP CHORD

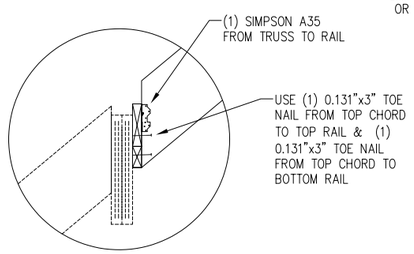

DETAIL 2
FLIP TRUSS TO STRINGER

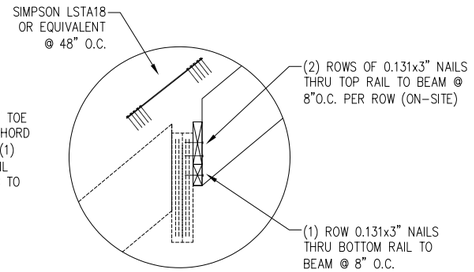

DETAIL 2A
TOP CHORD FLIP CONNECTION

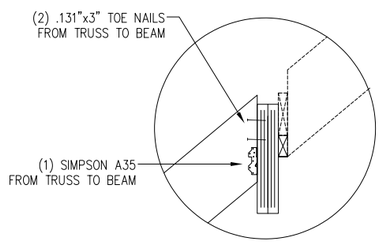

DETAIL 2B
TOP CHORD TO
MID-SPAN ROOF BEAM

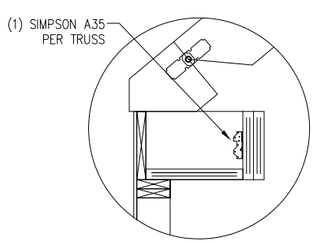

DETAIL 3
VERTICAL HEEL BEAM TO
BOTTOM CHORD CONNECTION

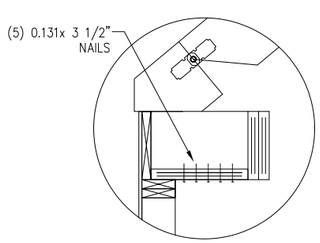

DETAIL 3A
SIDEWALL THRUST BEAM TO
BOTTOM CHORD CONNECTION

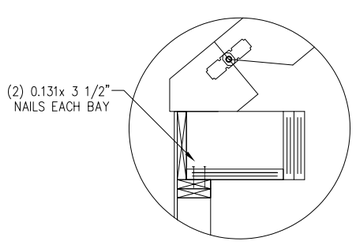

DETAIL 3B
SIDEWALL THRUST BEAM TO
WALL PLATE CONNECTION

PFS **APPROVED**
DATE 3/23/21
PFS CORPORATION
Bloomsburg, PA

COZY CABINS LLC
455 FARMERSVILLE RD.
NEW HOLLAND, PA 17557
PHONE: 717-354-3278
FAX: 717-354-0015
WWW.MYCOZYCABINS.COM

THESE DRAWINGS HAVE BEEN PREPARED BY
GLENCO, INC.

THIS DOCUMENT AND THE SUBJECT MATTER CONTAINED HEREIN IS PROPRIETARY AND MAY NOT BE REPRODUCED WITHOUT WRITTEN PERMISSION
www.glencoinc.com

CUSTOMER/PROJECT: NICOLE HIDALGO
22 MUSTANG ROAD
LAKE ARIEL, PA 18436

BUILDER: COZY CABINS, LLC
455 FARMERSVILLE RD.
NEW HOLLAND, PA 17557

REV#	DATE	REVISIONS	BY

DRAWN BY: NKG
DATE: 01/21/21
SCALE: NTS
CHECKED BY: LDZ

FILE: CC-729
SQ.FT.: 1,660
STATE: PA
TYPE: CAPE
MODEL: CHALET
DRAWING: VAULT TRUSS CONNECTIONS
SHEET: 5C

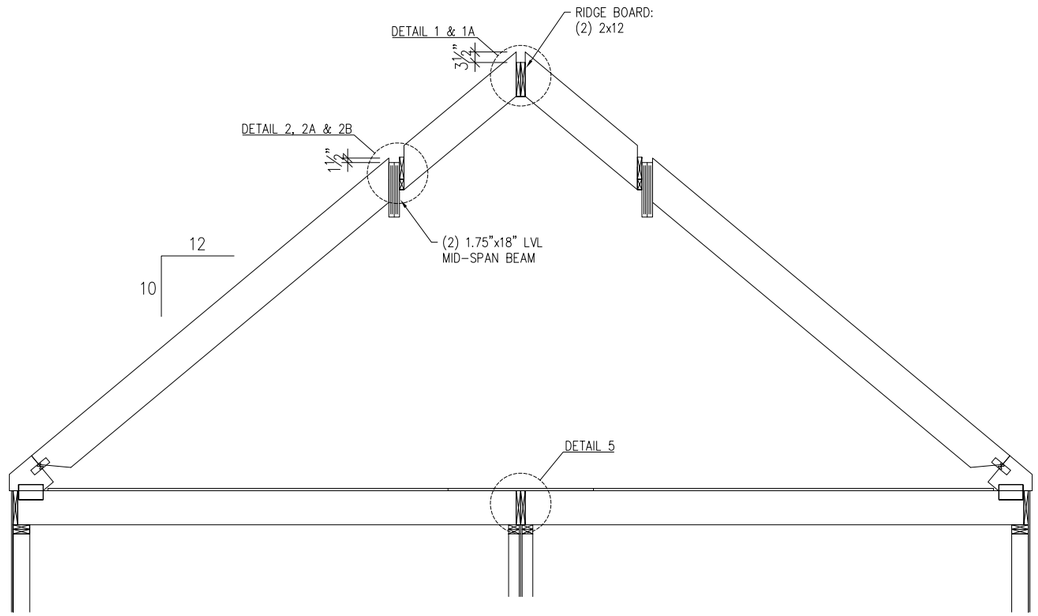

TRUSS D1048841

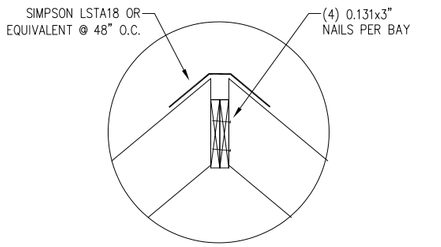

DETAIL 1
RIDGE BOARD TO RIDGE BOARD ON-SITE

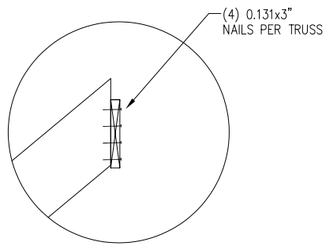

DETAIL 1A
RIDGE BOARD TO TRUSS TOP CHORD

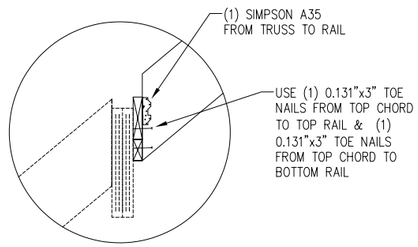

DETAIL 2
FLIP TRUSS TO STRINGER

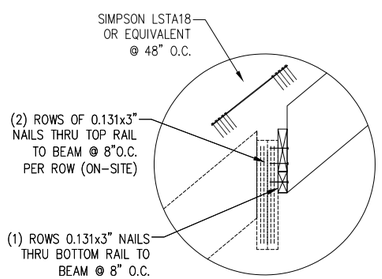

DETAIL 2A
TOP CHORD FLIP CONNECTION

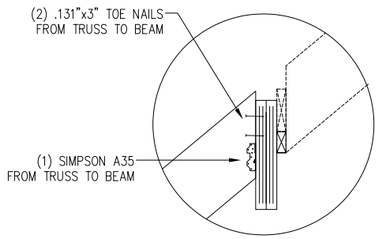

DETAIL 2B
TOP CHORD TO
MID-SPAN ROOF BEAM

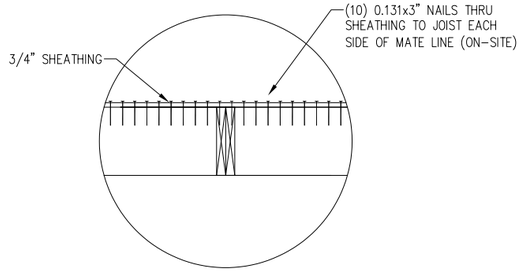

DETAIL 5
TRUSS TO TRUSS ACROSS MATE LINE

APPROVED
DATE 3/23/21
PFS CORPORATION
Bloomsburg, PA

COZY CABINS LLC
455 FARMERSVILLE RD.
NEW HOLLAND, PA 17557
PHONE: 717-354-3278
FAX: 717-354-0015
WWW.MYCOZYCABINS.COM

THESE DRAWINGS HAVE BEEN PREPARED BY
GLENCO, INC.

THIS DOCUMENT AND THE SUBJECT MATTER CONTAINED HEREIN IS PROPRIETARY AND MAY NOT BE REPRODUCED WITHOUT WRITTEN PERMISSION
www.glencoinc.com

CUSTOMER/PROJECT:
NICOLE HIDALGO
22 MUSTANG ROAD
LAKE ARIEL, PA 18436

BUILDER:
COZY CABINS, LLC
455 FARMERSVILLE RD.
NEW HOLLAND, PA 17557

REV#	DATE	REVISIONS	BY

DRAWN BY: NKG
DATE: 01/21/21
SCALE: NTS
CHECKED BY: LDZ

FILE: CC-729
SQ.FT.: 1,660
STATE: PA
TYPE: CAPE
MODEL: CHALET
DRAWING: 2-STORY TRUSS CONNECTIONS
SHEET: 5D

PFS **APPROVED**

DATE 3/23/21

PFS CORPORATION

Bloomsburg, PA

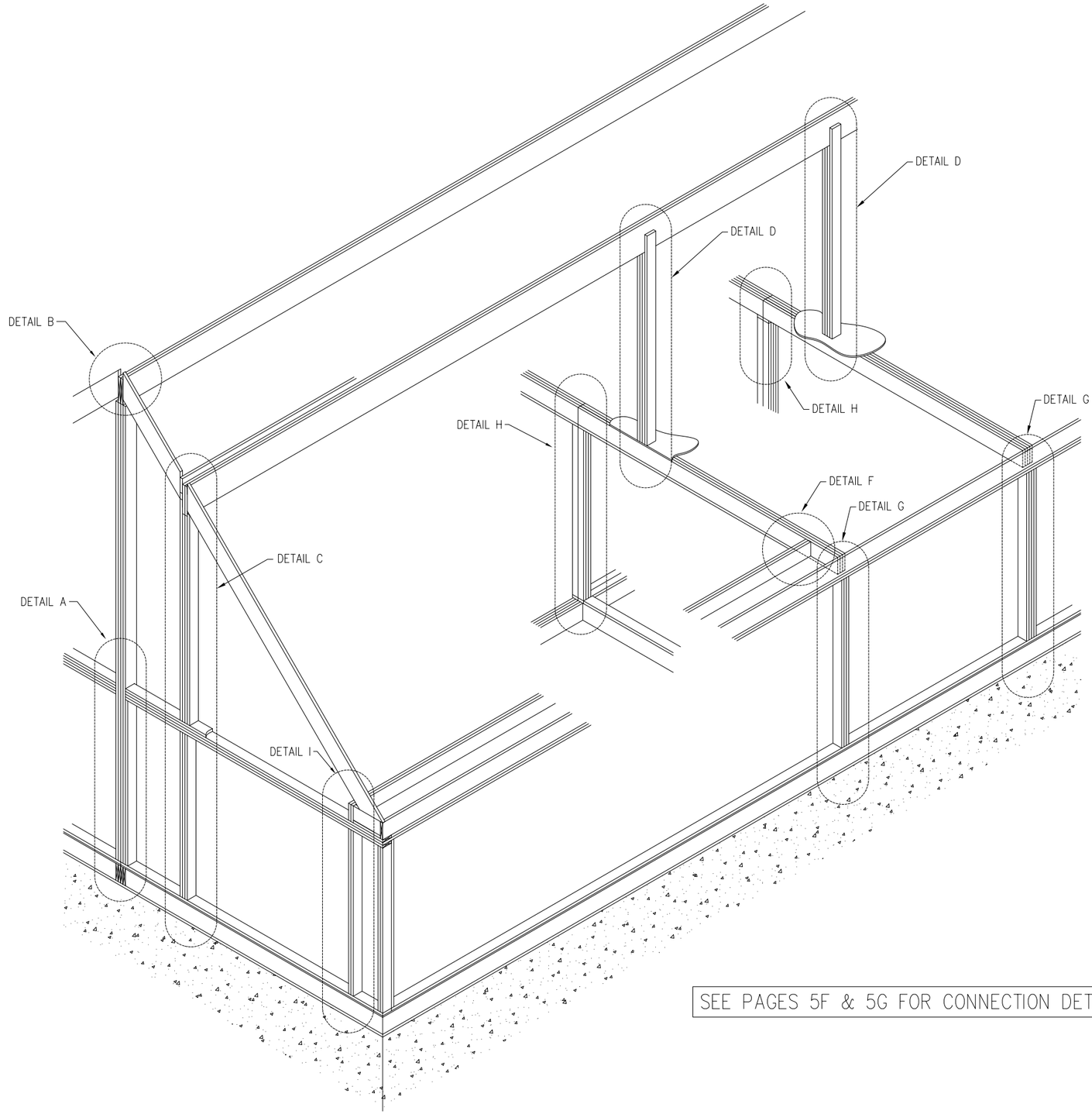

SEE PAGES 5F & 5G FOR CONNECTION DETAILS

COZY CABINS LLC
455 FARMERSVILLE RD.
NEW HOLLAND, PA. 17557
PHONE: 717-354-3278
FAX: 717-354-0015
WWW.MYCOZYCABINS.COM

Cozy Cabins LLC

THESE DRAWINGS HAVE BEEN PREPARED BY **GLENCO, INC.**

THIS DOCUMENT AND THE SUBJECT MATTER CONTAINED HEREIN IS PROPRIETARY AND MAY NOT BE REPRODUCED WITHOUT WRITTEN PERMISSION
www.glencoinc.com

CUSTOMER/PROJECT:
NICOLE HIDALGO
22 MUSTANG ROAD
LAKE ARIEL, PA 18436

BUILDER:
COZY CABINS, LLC
455 FARMERSVILLE RD.
NEW HOLLAND, PA 17557

REV#	DATE	REVISIONS	BY

DRAWN BY: NKG
DATE: 01/21/21
SCALE: NTS
CHECKED BY: LDZ

FILE: CC-729
SQ.FT.: 1,660
STATE: PA
TYPE: CAPE
MODEL: CHALET
DRAWING: CONNECTION DETAILS
SHEET: 5E

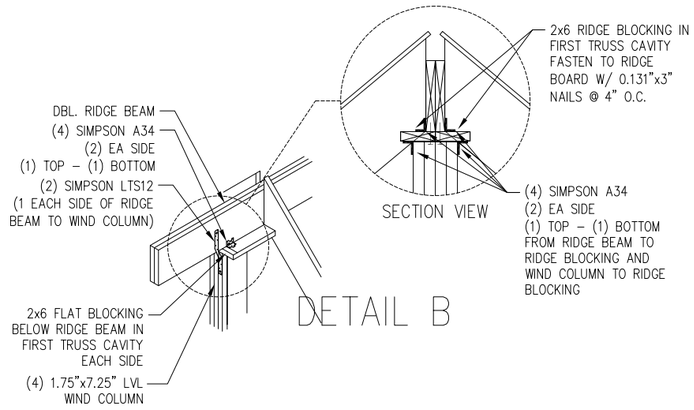

DETAIL B

–REQUIREMENTS FOR STRAPS FASTENED TO EDGE OR OF LVL MEMBERS:
– (2) ROWS OF NAILS w/ 1/2" MIN. SPACING BETWEEN ROWS

8d COMMON NAILS (0.131"x2.5")	
MIN. SPACING PER ROW:	3" O.C.
MIN. END DISTANCE:	2"
10d COMMON NAILS (0.148"x3")	
MIN. SPACING PER ROW:	4" O.C.
MIN. END DISTANCE:	3"

–STRUCTURAL MEMBERS INDICATED ON THIS PLAN ARE ASSUMED TO HAVE FULL BEARING ON THE SPECIFIED SUPPORT COLUMN UNLESS NOTED OTHERWISE
–ALL STUDS INDICATED FOR HEADERS ARE ASSUMED TO BE JACK STUDS UNLESS NOTED OTHERWISE
–END LENGTH OF STRAPS FASTENED TO THE END OR EDGE OF LVL MEMBERS MUST BE INCREASED ACCORDINGLY FOR A MINIMUM NAIL SPACING OF 3" O.C.
–STRUCTURAL BEAMS SHALL NOT BE NOTCHED OR DRILLED
–FASTEN ALL HEADERS TO KING STUDS w/ (4) 0.131"x3" NAILS EACH END (TOENAILED OR IN ENDGRAIN)

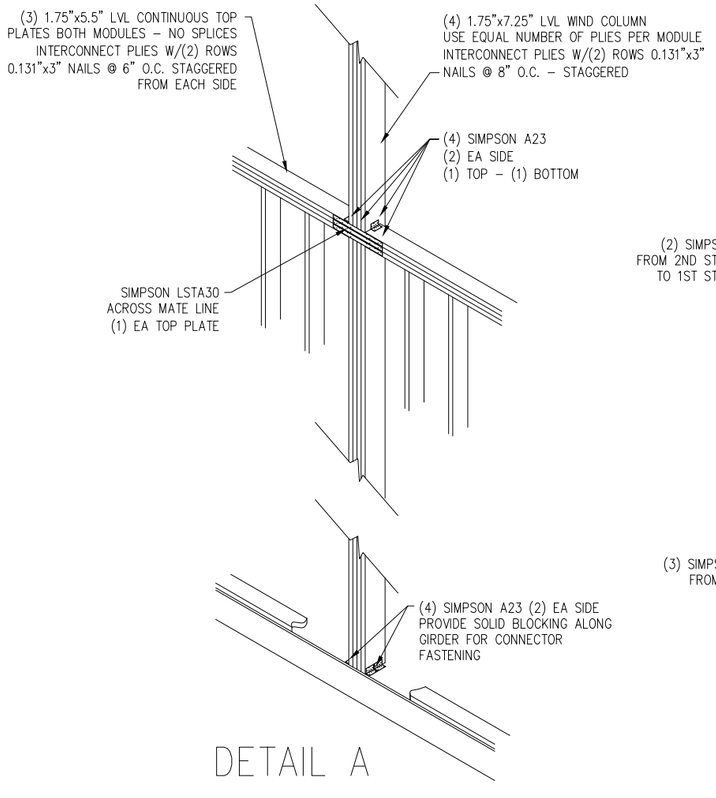

DETAIL A

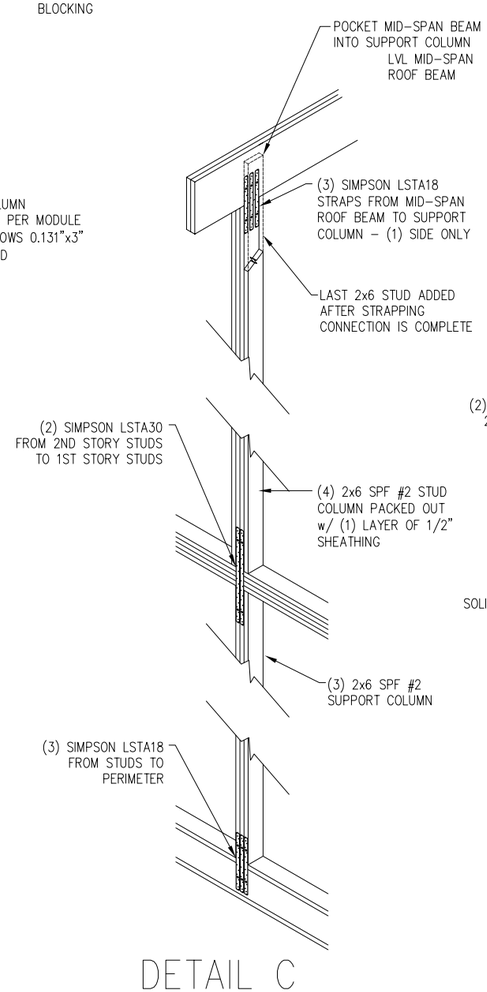

DETAIL C

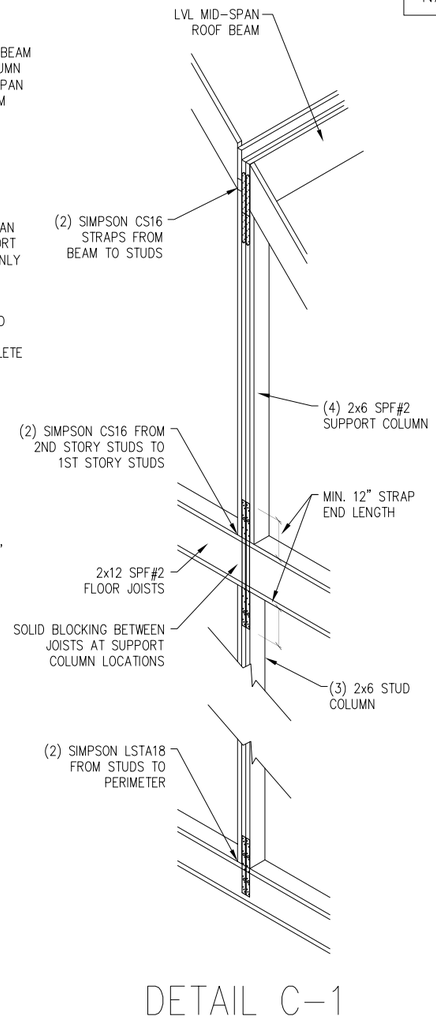

DETAIL C–1
FLOOR FRAMING BETWEEN COLUMNS

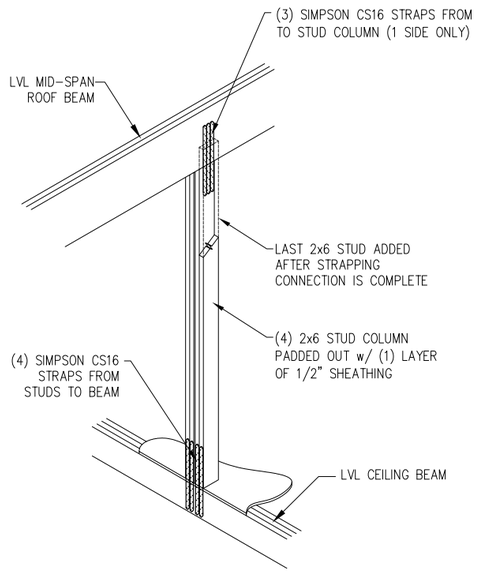

DETAIL D

PFS APPROVED
DATE 3/23/21
PFS CORPORATION
Bloomsburg, PA

COZY CABINS LLC
455 FARMERSVILLE RD.
NEW HOLLAND, PA 17557
PHONE: 717–354–3278
FAX: 717–354–0015
WWW.MYCOZYCABINS.COM

THESE DRAWINGS HAVE BEEN PREPARED BY
GLENCO, INC.

THIS DOCUMENT AND THE SUBJECT MATTER CONTAINED HEREIN IS PROPRIETARY AND MAY NOT BE REPRODUCED WITHOUT WRITTEN PERMISSION
www.glencoinc.com

CUSTOMER/PROJECT:
NICOLE HIDALGO
22 MUSTANG ROAD
LAKE ARIEL, PA 18436

BUILDER:
COZY CABINS, LLC
455 FARMERSVILLE RD.
NEW HOLLAND, PA 17557

REV#	DATE	BY	REVISIONS	DRAWN BY:	DATE:	SCALE:	CHECKED BY:
				NKG	01/21/21	NTS	LDZ

FILE: CC–729
SQ.FT.: 1,660
STATE: PA
TYPE: CAPE
MODEL: CHALET
DRAWING: CONNECTION DETAILS
SHEET: 5F

- REQUIREMENTS FOR STRAPS FASTENED TO EDGE OR OF LVL MEMBERS:
  - (2) ROWS OF NAILS w/ 1/2" MIN. SPACING BETWEEN ROWS

8d COMMON NAILS (0.131"x2.5")	
MIN. SPACING PER ROW:	3" O.C.
MIN. END DISTANCE:	2"
10d COMMON NAILS (0.148"x3")	
MIN. SPACING PER ROW:	4" O.C.
MIN. END DISTANCE:	3"

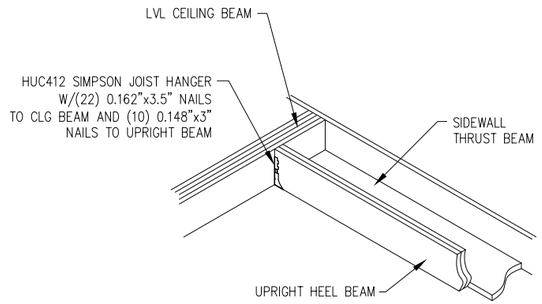

DETAIL F

- STRUCTURAL MEMBERS INDICATED ON THIS PLAN ARE ASSUMED TO HAVE FULL BEARING ON THE SPECIFIED SUPPORT COLUMN UNLESS NOTED OTHERWISE
- ALL STUDS INDICATED FOR HEADERS ARE ASSUMED TO BE JACK STUDS UNLESS NOTED OTHERWISE
- END LENGTH OF STRAPS FASTENED TO THE END OR EDGE OF LVL MEMBERS MUST BE INCREASED ACCORDINGLY FOR A MINIMUM NAIL SPACING OF 3" O.C.
- STRUCTURAL BEAMS SHALL NOT BE NOTCHED OR DRILLED
- FASTEN ALL HEADERS TO KING STUDS w/ (4) 0.131"x3" NAILS EACH END (TOENAILED OR IN ENDGRAIN)

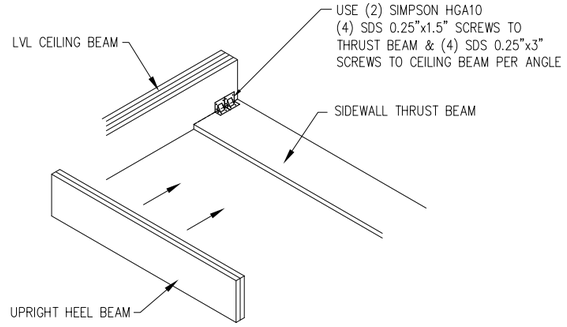

DETAIL F-1

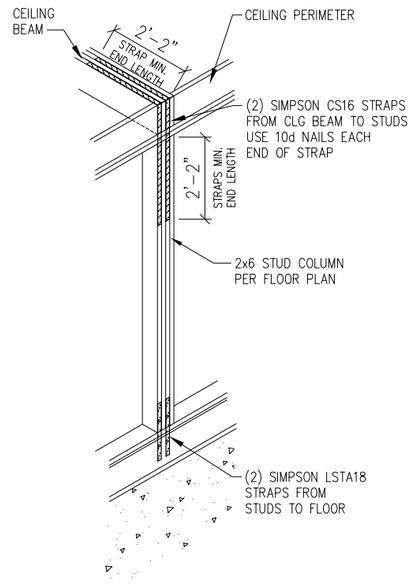

DETAIL G

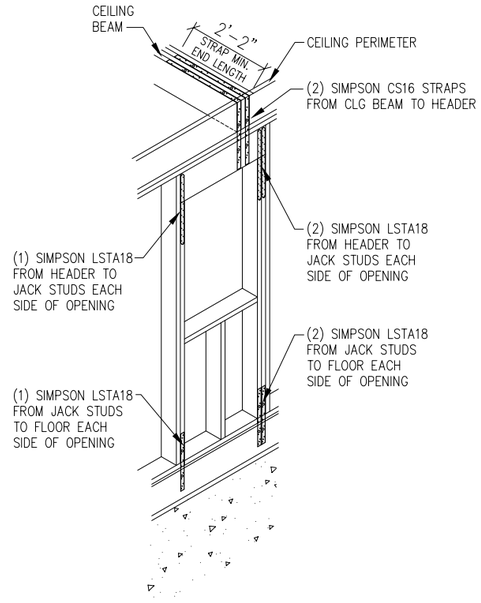

DETAIL G-1

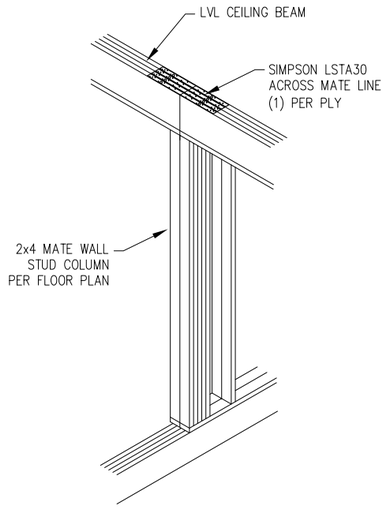

DETAIL H

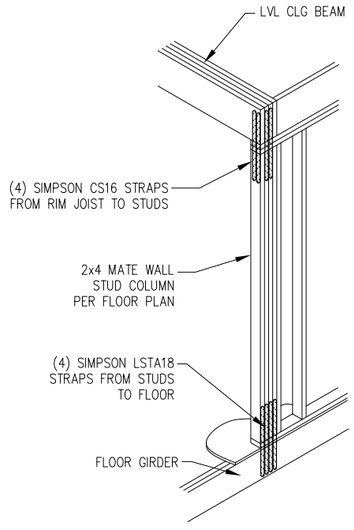

DETAIL H-1

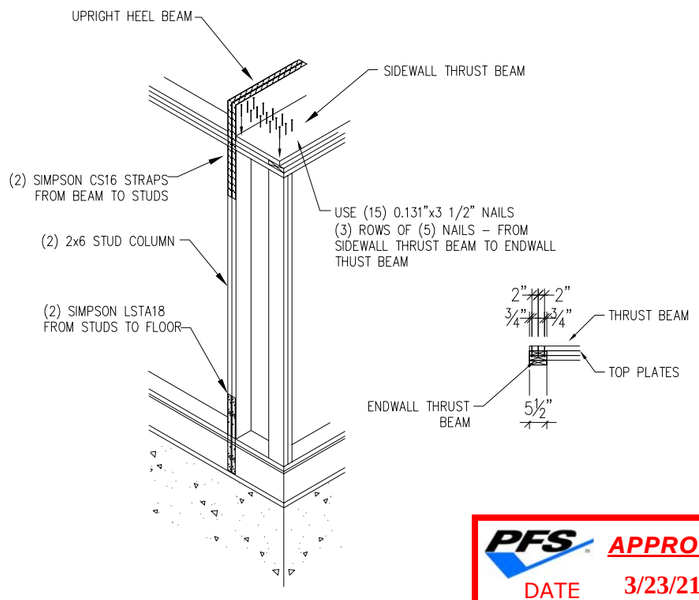

DETAIL I

PFS APPROVED
DATE 3/23/21
PFS CORPORATION
Bloomsburg, PA

COZY CABINS LLC
455 FARMERSVILLE RD.
NEW HOLLAND, PA 17557
PHONE: 717-354-3278
FAX: 717-354-0015
WWW.MYCOZYCABINS.COM

THESE DRAWINGS HAVE BEEN PREPARED BY GLENCO, INC.

THIS DOCUMENT AND THE SUBJECT MATTER CONTAINED HEREIN IS PROPRIETARY AND MAY NOT BE REPRODUCED WITHOUT WRITTEN PERMISSION
www.glencoinc.com

CUSTOMER/PROJECT: NICOLE HIDALGO, 22 MUSTANG ROAD, LAKE ARIEL, PA 18436
BUILDER: COZY CABINS, LLC, 455 FARMERSVILLE RD., NEW HOLLAND, PA 17557

REV#	DATE	REVISIONS	BY

DRAWN BY: NKG
DATE: 01/21/21
SCALE: NTS
CHECKED BY: LDZ

FILE: CC-729
SQ.FT.: 1,660
STATE: PA
TYPE: CAPE
MODEL: CHALET
DRAWING: CONNECTION DETAILS
SHEET: 5G

TOP LOADED BEAMS

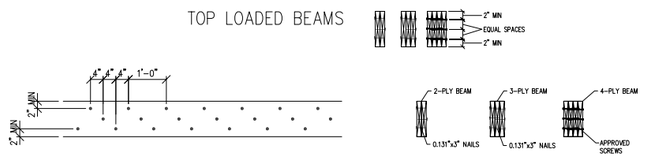

FASTENING REQUIREMENTS FOR MULTIPLE PLY LVL MEMBERS:

2- AND 3-PLY MEMBERS:
- 12" OR LESS x 1.5" MEMBER BEAMS:
  USE (2) ROWS OF 0.131"x3" NAILS @ 8" O.C.
- 14", 16" OR 18" x 1.5" MEMBER BEAMS:
  USE (3) ROWS OF 0.131"x3" NAILS @ 8" O.C.
- 20",22" OR 24" x 1.5" MEMBER BEAMS:
  USE (4) ROWS OF 0.131"x3" NAILS @ 8" O.C.

4-PLY MEMBERS:
- 16" OR LESS x 1.5" MEMBER BEAMS:
  USE (2) ROWS OF APPROVED SCREWS @ 24" O.C.
- 16" TO 24" x 1.5" MEMBER BEAMS:
  USE (3) ROWS OF APPROVED SCREWS @ 24" O.C.

NOTES:
- FOR 1.75" THICK MEMBERS, USE 0.131"x3.5" NAILS IN PLACE OF 0.131"x3" NAILS.
- THE FOLLOWING SCREWS ARE APPROVED FOR USE IN CONNECTING MULTIPLE PLIES OF LVL:
  - SIMPSON SDW WOOD SCREWS
  - SIMPSON SDS WOOD SCREWS
  - USP WS WOOD SCREWS
  - FASTENMASTER TRUSSLOK WOOD SCREWS
- IF THE FASTENER POINT PENETRATES A MINIMUM OF 75% OF THE 4TH PLY OF THE BEAM, THEY MAY BE APPLIED FROM ONE SIDE OF THE BEAM; OTHERWISE, THE FASTENERS MUST BE APPLIED FROM BOTH SIDES AND STAGGERED.
- LOAD MUST BE APPLIED EVENLY TO ALL 4 PLIES; OTHERWISE, USE CONNECTIONS FOR SIDE LOADED MEMBERS.
- FASTENING SPACING IS FOR EACH ROW. STAGGER SPACING BETWEEN ROWS OF FASTENERS.

SIDE LOADED BEAMS

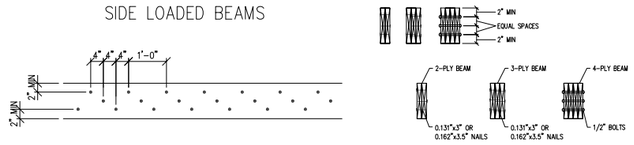

FASTENING REQUIREMENTS FOR MULTIPLE PLY LVL MEMBERS:

(2) 1.5" MEMBER BEAMS:
- USE (3) ROWS OF 0.131"x3" NAILS @ 12" O.C. (575 PLF MAX. UNIFORM LOAD)
- USE (3) ROWS OF 0.131"x3" NAILS @ 6" O.C. (1,150 PLF MAX. UNIFORM LOAD)

(2) 1.75" MEMBER BEAMS:
- USE (3) ROWS OF 0.162"x3.5" NAILS @ 12" O.C. (845 PLF MAX. UNIFORM LOAD)
- USE (3) ROWS OF 0.162"x3.5" NAILS @ 6" O.C. (1,690 PLF MAX. UNIFORM LOAD)

(3) 1.5" MEMBER BEAMS:
- USE (3) ROWS OF 0.131"x3" NAILS @ 12" O.C. (431 PLF MAX. UNIFORM LOAD)
- USE (3) ROWS OF 0.131"x3" NAILS @ 6" O.C. (863 PLF MAX. UNIFORM LOAD)
- USE (3) ROWS OF 0.131"x3" NAILS @ 4" O.C. (1,294 PLF MAX. UNIFORM LOAD)

(3) 1.75" MEMBER BEAMS:
- USE (3) ROWS OF 0.162"x3.5" NAILS @ 12" O.C. (635 PLF MAX. UNIFORM LOAD)
- USE (3) ROWS OF 0.162"x3.5" NAILS @ 6" O.C. (1,270 PLF MAX. UNIFORM LOAD)

(4) 1.5" OR 1.75" MEMBER BEAMS:
- USE (2) ROWS OF 1/2" BOLTS @ 12" O.C. (580 PLF MAX. UNIFORM LOAD)
- USE (3) ROWS OF 1/2" BOLTS @ 12" O.C. (870 PLF MAX. UNIFORM LOAD)

NOTES:
- VALUES APPLY TO COMMON A307 BOLTS. BOLT HOLES MUST BE THE SAME DIAMETER AS THE THE BOLTS. WASHERS MUST BE USED UNDER THE BOLT HEADS AND NUTS.
- THE SPECIFIED NAILING APPLIES TO BOTH SIDES OF A 3-PLY BEAM.
- 7" WIDE BEAMS MAY NOT BE LOADED FROM ONE SIDE ONLY. THEY MUST BE LOADED FROM BOTH SIDES AND/OR TOP LOADED.
- LOAD DURATION FACTORS MAY BE APPLIED TO THE LOADS LISTED ABOVE.

LVL DESIGN IS SUFFICIENT FOR LVL GRADES WITH A SPECIFIC GRAVITY OF 0.5 OR BETTER

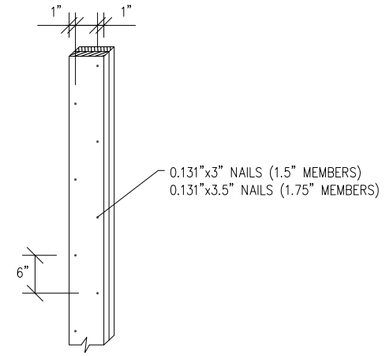

BUILT UP COLUMN FASTENING

PFS APPROVED
DATE 3/23/21
PFS CORPORATION
Bloomsburg, PA

COZY CABINS LLC
455 FARMERSVILLE RD.
NEW HOLLAND, PA 17557
PHONE: 717-354-3278
FAX: 717-354-0015
WWW.MYCOZYCABINS.COM

THESE DRAWINGS HAVE BEEN PREPARED BY **GLENCO, INC.**

THIS DOCUMENT AND THE SUBJECT MATTER CONTAINED HEREIN IS PROPRIETARY AND MAY NOT BE REPRODUCED WITHOUT WRITTEN PERMISSION
www.glencoinc.com

CUSTOMER/PROJECT: NICOLE HIDALGO
22 MUSTANG ROAD
LAKE ARIEL, PA 18436

BUILDER: COZY CABINS, LLC
455 FARMERSVILLE RD.
NEW HOLLAND, PA 17557

REV#	DATE	REVISIONS	BY

DRAWN BY: NKG
DATE: 01/21/21
SCALE: NTS
CHECKED BY: LDZ

FILE: CC-729
SQ.FT.: 1,660
STATE: PA
TYPE: CAPE
MODEL: CHALET
DRAWING: LVL INTERCONNECTION DETAILS
SHEET: 5H

PROVIA WINDOW SCHEDULE

BUILDER / MANUFACTURER TO VERIFY ALL WINDOW ROUGH OPENINGS PRIOR TO CONSTRUCTION

CALL OUT	MFGR	R.O.			AREA	LIGHT	VENT	U VALUE	DP RATING	SHGC
PV 3048	PROVIA DOUBLE HUNG	30	x	48	10.00	6.66	2.83	0.26	DP50	0.27
PV 3648	PROVIA DOUBLE HUNG	36	x	48	12.00	8.36	3.51	0.26	DP50	0.27
PV 3860	PROVIA DOUBLE HUNG	38	x	60	15.83	11.76	5.73	0.26	DP50	0.27
PV 6090-CT	PROVIA CIRCLE TOP	60	x	90	32.85	32.4	0	0.26	DP50	0.28
PV 6036-2	PROVIA DOUBLE HUNG	59.63	x	36	14.91	9.42	3.6	0.26	DP50	0.27
PV 6048-2	PROVIA DOUBLE HUNG	59.63	x	48	19.88	13.32	5.66	0.26	DP50	0.27
PV 7660-2	PROVIA DOUBLE HUNG	75.63	x	60	31.51	23.52	11.46	0.26	DP50	0.27
PV 9048-3	PROVIA DOUBLE HUNG	89.25	x	48	29.75	19.98	8.49	0.26	DP50	0.27
PV 11460-3	PROVIA DOUBLE HUNG	113.25	x	60	47.19	35.28	17.19	0.26	DP50	0.27
PV 3030 CSMT	PROVIA CASEMENT	30	x	30	6.25	4.32	4.32	0.22	DP50	0.18
PV 3036 CSMT	PROVIA CASEMENT	30	x	36	7.50	5.36	5.36	0.22	DP50	0.18
PV 6048-2 CSMT	PROVIA CASEMENT	59.63	x	48	19.88	14.88	14.88	0.22	DP50	0.18
VX 2448	VELUX FIXED SKYLIGHT	21	x	45.75	6.67	3.87	0	0.41	DP50	0.26
VISTA GLASS (26')	(6) PROVIA TRAPEZOIDS	N/A	x	N/A	62.84	51.46	0	0.28	DP50	0.23
VISTA GLASS (28')	(6) PROVIA TRAPEZOIDS	N/A	x	N/A	78.42	65.18	0	0.28	DP50	0.23
VISTA GLASS (30')	(6) PROVIA TRAPEZOIDS	N/A	x	N/A	95.60	80.98	0	0.28	DP50	0.23

EXTERIOR DOOR SCHEDULE

BUILDER / MANUFACTURER TO VERIFY ALL DOOR ROUGH OPENINGS PRIOR TO CONSTRUCTION

CALL OUT	MFGR / SERIES	R.O.			AREA	LIGHT	VENT	U VALUE	SHGC
PV 3680-6P	PROVIA 6-PANEL SOLID	38.25	x	82.00	21.8	0.0	19.3	0.14	0.01
PV 3680-9L	PROVIA 9-LITE GLASS	38.25	x	82.00	21.8	5.0	19.3	0.19	0.08
PV 3680-15L	PROVIA 15-LITE GLASS	38.25	x	82.00	21.8	9.0	19.3	0.23	0.15
PV 3680-OVL	PROVIA OVAL GLASS	38.25	x	82.00	21.8	0.0	19.3	0.21	0.12
PV 3680-6L	PROVIA 6-LITE UPPER GLASS	38.25	x	82.00	21.8	2.2	19.3	0.20	0.06
PV 3680-6L-DSL	PROVIA 6-LITE DUAL SIDELITES	68.75	x	82.00	39.1	8.2	19.3	0.20	0.06
PV 7280-FRENCH SA	PROVIA SGL-ACTIVE FRENCH	74.25	x	82.00	42.3	18.1	19.3	0.23	0.15
PV 7280-FRENCH DA	PROVIA DBL-ACTIVE FRENCH	74.75	x	82.00	42.6	18.1	38.5	0.23	0.15
PV 7280-PATIO	PROVIA PATIO	71.50	x	80.00	39.7	27.7	15.6	0.25	0.25
PV 9680-PATIO	PROVIA PATIO	95.00	x	80.00	52.8	39.2	21.7	0.25	0.25
PV 10480-PATIO	PROVIA PATIO	104.00	x	80.00	57.8	41.6	15.6	0.25	0.25
PV3680-9L MB	PROVIA HALF GL. MINI BLINDS	38.00	x	82.00	21.6	0.0	19.3	0.25	0.14
PV3680-15L MB	PROVIA FULL GL. MINI BLINDS	38.00	x	82.00	21.6	0.0	0.0	0.33	0.26
PV 7280-FRENCH SA MB	PROVIA FRENCH SA MINI BLINDS	74.25	x	82.00	42.3	18.1	19.3	0.33	0.26
PV 7280-FRENCH DA MB	PROVIA FRENCH DA MINI BLINDS	74.75	x	82.00	42.6	18.1	38.5	0.33	0.26
PV 7280-PATIO MB	PROVIA PATIO MINI BLINDS	71.50	x	80.00	39.7	27.7	15.6	0.29	0.24

INTERIOR DOOR SCHEDULE

BUILDER / MANUFACTURER TO VERIFY ALL DOOR ROUGH OPENINGS PRIOR TO

TAG	CALL OUT	MFGR	R.O.			AREA
18	HINGED 1/6	STALLION	20	x	82.5	11.5
24	HINGED 2/0	STALLION	26	x	82.5	14.9
28	HINGED 2/4	STALLION	30	x	82.5	17.2
30	HINGED 2/6	STALLION	32	x	82.5	18.3
32	HINGED 2/8	STALLION	34	x	82.5	19.5
36	HINGED 3/0	STALLION	38	x	82.5	21.8
24	BIFOLD 2/0	STALLION	25.75	x	82.5	14.8
30	BIFOLD 2/6	STALLION	31.75	x	82.5	18.2
36	BIFOLD 3/0	STALLION	37.75	x	82.5	21.6
48	DBL. BIFOLD 2/0	STALLION	49.5	x	82.5	28.4
60	DBL. BIFOLD 2/6	STALLION	37.5	x	82.5	21.5
72	DBL. BIFOLD 3/0	STALLION	73.5	x	82.5	42.1
48	BI-PASS 4/0	STALLION	48	x	83.75	27.9
60	BI-PASS 5/0	STALLION	60	x	83.75	34.9
72	BI-PASS 6/0	STALLION	72	x	83.75	41.9
24	POCKET 2/0	STALLION	49.75	x	84.5	29.2
30	POCKET 2/6	STALLION	61.75	x	84.5	36.2
28	POCKET 2/8	STALLION	65.75	x	84.5	38.6
36	POCKET 3/0	STALLION	73.75	x	84.5	43.3

CALLOUT SUFFIXES

THE FOLLOWING SUFFIXES MAY BE APPENDED TO A CALLOUT TO SIGNIFY THE SPECIFICATIONS AS LISTED:

EGR = MEETS EGRESS REQUIREMENTS
PG = PRAIRIE GRID STYLE
NG = NO GRIDS

GENERAL NOTES:

1. WINDOWS, SKYLIGHTS, AND DOORS OF EQUAL OR BETTER "U" AND INFILTRATION VALUES, AND MANUFACTURED BY OTHER THAN SHOWN, MAY BE SUBSTITUTED. AIR INFILTRATION VALUES MUST COMPLY WITH THE MAXIMUM ALLOWABLE INFILTRATION RATES AND "U" VALUES, IF NOT CERTIFIED BY ACCREDITED LABORATORY IN ACCORDANCE WITH NFRC 100.
2. WINDOW AREA OF HABITABLE SPACE (SLEEPING AREAS, LIVING, DINING, INCLUDING KITCHEN/DINING IF NO OTHER DINING AREAS ARE PROVIDED) SHALL BE 8% OF THE FLOOR AREA FOR NATURAL LIGHT WITH 4% OPENING FOR VENTILATION MINIMUM. KITCHENETTES, BATHROOMS, AND TOILET ROOMS MAY BE PROVIDED WITH MECHANICAL VENTILATION ONLY, OR PROVIDED WITH NATURAL VENTILATION WITH AN OPENABLE AREA OF 4% MIN EXCEPT THAT THE MIN AREA SHALL NOT BE LESS THAN 1 ½ SQ.FT. FOR BATHROOMS OR TOILET ROOMS AND NOT LESS THEN 3 SQ.FT. FOR KITCHENETTES.
3. DOORS, VENTS, AND OPENINGS IN EXTERIOR OR INTERIOR TENANT SEPARATION WALLS, STAIR AND GARAGE SEPARATION WALLS, SKYLIGHTS, RIDGE VENTS, LOUVERS OR OPENINGS PASSING THROUGH A FIRE RATED CEILING IN A STAIRS OR GARAGE SHALL BE ¾ HR. MN. FIRE RATED AND BE SELF CLOSING OR HAVE A 1 HR. MIN. OPENING PROTECTION.
4. EGRESS WINDOWS SHALL HAVE A NET CLEAR OPENING OF 5 SQ.FT. AT GRADE LEVEL FLOORS AND 5.7 SQ.FT. FOR ALL OTHER FLOORS. ALL EGRESS WINDOWS SHALL HAVE A NET CLEAR OPENING OF 24" HIGH, 20" WIDE AND A MAXIMUM SILL HEIGHT OF 44" ABOVE THE FINISHED FLOOR. WINDOWS MUST MEET EGRESS BY NORMAL OPERATION. THE REMOVAL OF SASH, TILTING/TWISTING SASH, SNAP AWAY HARDWARE ETC. TO MEET EGRESS REQUIREMENTS IS NOT PERMITTED.
5. ALL JOINTS, CONNECTIONS, AND PENETRATIONS BETWEEN CONDITIONED SPACE AND UNCONDITIONED OR OUTSIDE SPACE MUST BE SEALED. CAULKING AND SEALANTS IN THE EXTERIOR ENVELOPE MUST BE IN COMPLIANCE WITH 2015 IRC.

PFS APPROVED
DATE 3/23/21
PFS CORPORATION
Bloomsburg, PA

COZY CABINS LLC
455 FARMERSVILLE RD.
NEW HOLLAND, PA 17557
PHONE: 717-354-3278
FAX: 717-354-0015
WWW.MYCOZYCABINS.COM

THESE DRAWINGS HAVE BEEN PREPARED BY GLENCO, INC.

THIS DOCUMENT AND THE SUBJECT MATTER CONTAINED HEREIN IS PROPRIETARY AND MAY NOT BE REPRODUCED WITHOUT WRITTEN PERMISSION
www.glencoinc.com

CUSTOMER/PROJECT:
NICOLE HIDALGO
22 MUSTANG ROAD
LAKE ARIEL, PA 18436

BUILDER:
COZY CABINS, LLC
455 FARMERSVILLE RD.
NEW HOLLAND, PA 17557

REVISIONS

REV#	DATE	BY

DRAWN BY: NKG
DATE: 01/21/21
SCALE: NTS
CHECKED BY: LDZ

FILE: CC-729
SQ.FT.: 1,660
STATE: PA
TYPE: CAPE
MODEL: CHALET
DRAWING: WINDOW & DOOR SCHEDULE
SHEET: 10

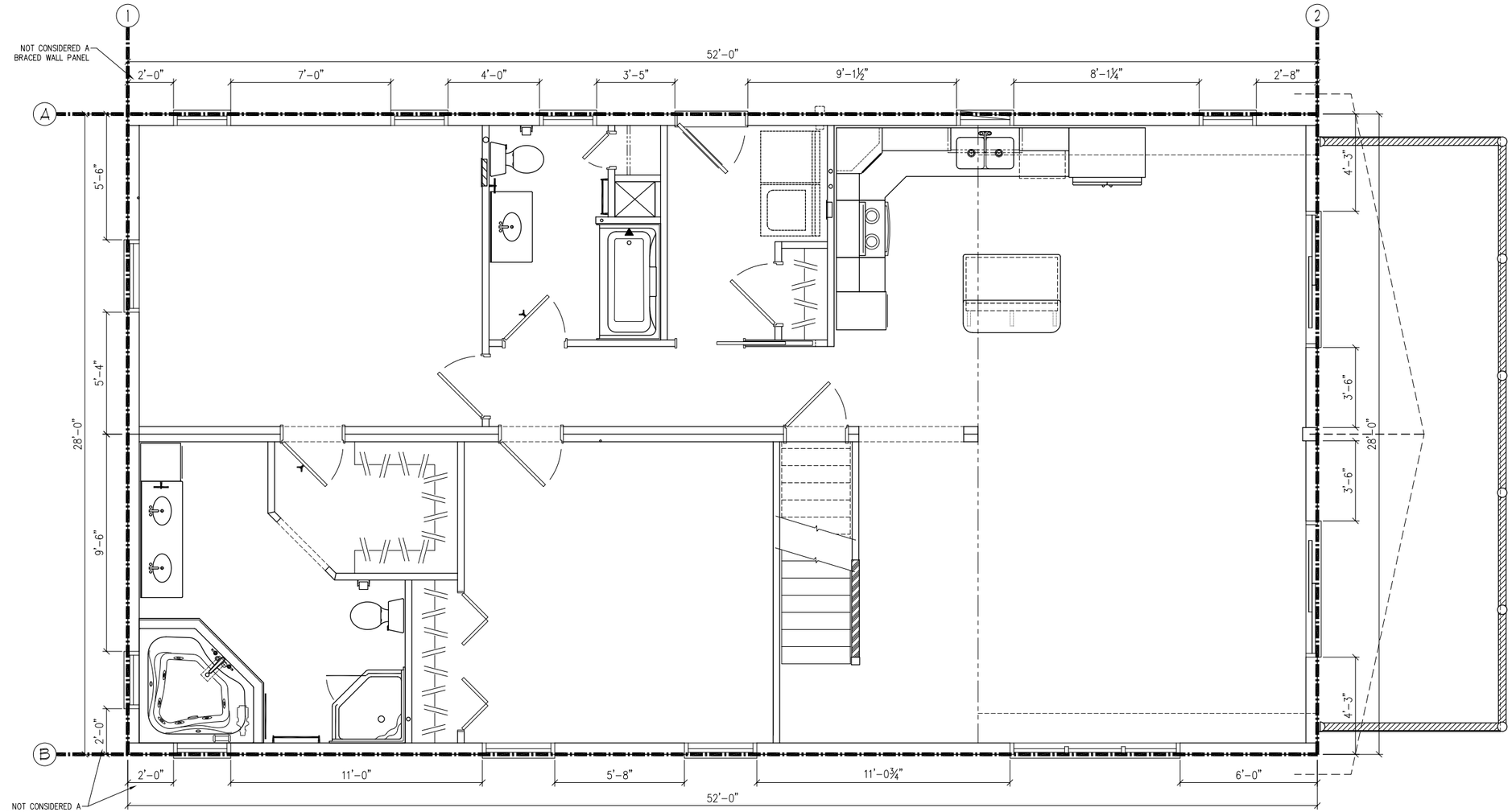

CODE	2015 IRC
# STORIES	1
SEISMIC DESIGN CATEGORY	B
WIND SPEED (Vult)	115
WIND EXPOSURE	C
EAVE TO RIDGE HEIGHT	13.17 FT
WALL HEIGHT	8'-1 1/8"
# VERTICAL BRACED WALL LINES	See Charts Below
# HORIZONTAL BRACED WALL LINES	See Charts Below
ROOF/CEILING DEAD LOAD - PSF	15 PSF
GYP ON I/S OF WALLS	YES

CS-WSP / WSP	SHALL BE CONSTRUCTED PER TABLE BELOW								
MINIMUM NAIL		MINIMUM WOOD STRUCTURAL PANEL SPAN RATING	MINIMUM NOMINAL PANEL THICKNESS (INCHES)	MAXIMUM WALL STUD SPACING (INCHES)	PANEL NAILING SPACING		ULTIMATE DESIGN WIND SPEED Vult (MPH)		
SIZE	PENETRATION (INCHES)				EDGES (INCHES O.C.)	FIELD (INCHES O.C.)	WIND EXPOSURE CATEGORY		
							B	C	D
6d Common (2.0"x0.113")	1.5	24/0	3/8	16	6	12	140	115	110
				16	3	6	140	140	140
8d Common (2.5"x0.131")	1.75	24/16	7/16	16	6	12	170	140	135
				24	6	12	140	115	110

PFS APPROVED
DATE 3/23/21
PFS CORPORATION
Bloomsburg, PA

EXTERIOR WALL LINE	BRACED WALL SPACING	BRACED WALL METHOD	TABULATED MIN BRACED WALL TOTAL Table R602.10.3(1)	WIND EXPOSURE FACTOR Table R602.10.3(2)	RIDGE TO EAVE HEIGHT FACTOR Table R602.10.3(2)	WALL HEIGHT FACTOR Table R602.10.3(2)	WALL LINE QTY FACTOR Table R602.10.3(2)	ADDT'L 800# HOLD DOWN DEVICE	INTERIOR GYPSUM BOARD FINISH (OR EQUIVALENT)	GYPSUM BOARD FASTENING	MIN BRACED WALL LENGTH REQ'D	WALL MEETS REQUIREMENT
A	28.00	CS-WSP	4.30	1.20	1.19	0.95	1.0	1.0	1.0	1.0	5.9	YES
B	28.00	CS-WSP	4.30	1.20	1.19	0.95	1.0	1.0	1.0	1.0	5.9	YES
1	52.00	CS-WSP	7.80	1.20	1.19	0.95	1.0	1.0	1.0	1.0	10.6	YES
2	52.00	CS-WSP	7.80	1.20	1.19	0.95	1.0	1.0	1.0	1.0	10.6	YES

COZY CABINS LLC
455 FARMERSVILLE RD.
NEW HOLLAND, PA 17557
PHONE: 717-354-3278
FAX: 717-354-0015
WWW.MYCOZYCABINS.COM

THESE DRAWINGS HAVE BEEN PREPARED BY **GLENCO, INC.**

THIS DOCUMENT AND THE SUBJECT MATTER CONTAINED HEREIN IS PROPRIETARY AND MAY NOT BE REPRODUCED WITHOUT WRITTEN PERMISSION
www.glencoinc.com

CUSTOMER/PROJECT: NICOLE HIDALGO, 22 MUSTANG ROAD, LAKE ARIEL, PA 18436
BUILDER: COZY CABINS, LLC, 455 FARMERSVILLE RD., NEW HOLLAND, PA 17557

REV#	DATE	REVISIONS	BY

DRAWN BY: NKG
DATE: 01/21/21
SCALE: 3/16"=1'-0"
CHECKED BY: LDZ

FILE: CC-729
SQ.FT.: 1,660
STATE: PA
TYPE: CAPE
MODEL: CHALET
DRAWING: BRACED WALL PLAN
SHEET: 11

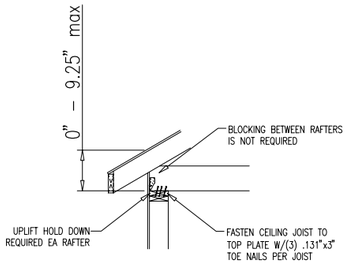

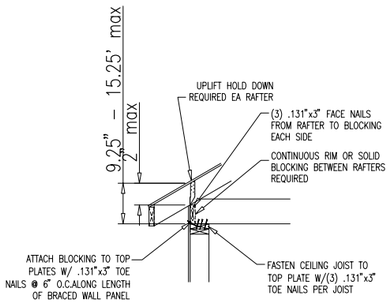

TRUSS/RAFTER TO BRACED WALL ATTACHMENT
(SEISMIC DESIGN CAT. A, B, & C)

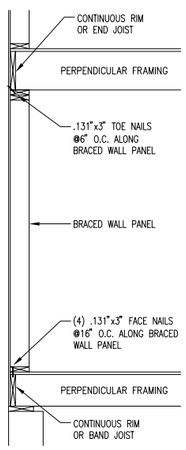

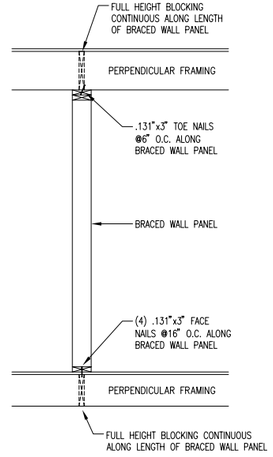

2015 INTERNATIONAL RESIDENTIAL CODE FIGURE R602.10.8(1)
BRACED WALL CONNECTION WHEN PERPENDICULAR TO FLOOR/CEILING FRAMING

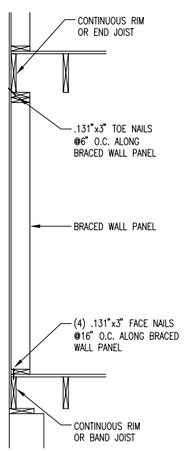

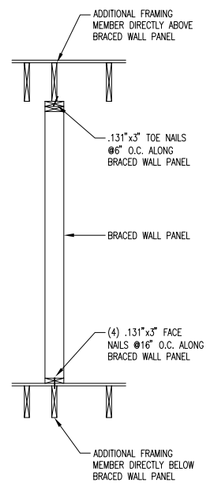

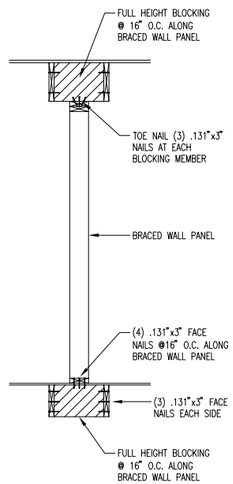

2015 INTERNATIONAL RESIDENTIAL CODE FIGURE R602.10.8(2)
BRACED WALL CONNECTION WHEN PARALLEL TO FLOOR/CEILING FRAMING

PFS APPROVED
DATE 3/23/21
PFS CORPORATION
Bloomsburg, PA

COZY CABINS LLC
455 FARMERSVILLE RD.
NEW HOLLAND, PA 17557
PHONE: 717-354-3278
FAX: 717-354-0015
WWW.MYCOZYCABINS.COM

THESE DRAWINGS HAVE BEEN PREPARED BY
GLENCO, INC.

THIS DOCUMENT AND THE SUBJECT MATTER CONTAINED HEREIN IS PROPRIETARY AND MAY NOT BE REPRODUCED WITHOUT WRITTEN PERMISSION
www.glencoinc.com

CUSTOMER/PROJECT:
NICOLE HIDALGO
22 MUSTANG ROAD
LAKE ARIEL, PA 18436

BUILDER:
COZY CABINS, LLC
455 FARMERSVILLE RD.
NEW HOLLAND, PA 17557

REV#	DATE	REVISIONS	BY

DRAWN BY: NKG
DATE: 01/21/21
SCALE: NTS
CHECKED BY: LDZ

FILE: CC-729
SQ.FT.: 1,660
STATE: PA
TYPE: CAPE
MODEL: CHALET
DRAWING: BRACED WALL DETAILS
SHEET: 11A

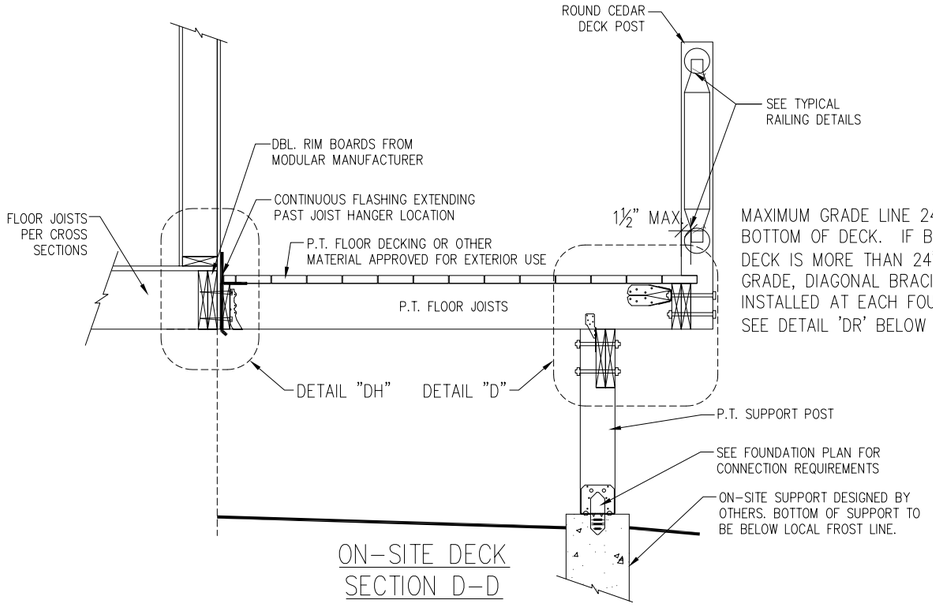

MAXIMUM GRADE LINE 24" BELOW BOTTOM OF DECK. IF BOTTOM OF DECK IS MORE THAN 24" ABOVE GRADE, DIAGONAL BRACING SHALL BE INSTALLED AT EACH FOUNDATION POST SEE DETAIL 'DR' BELOW

ON-SITE DECK SECTION D-D

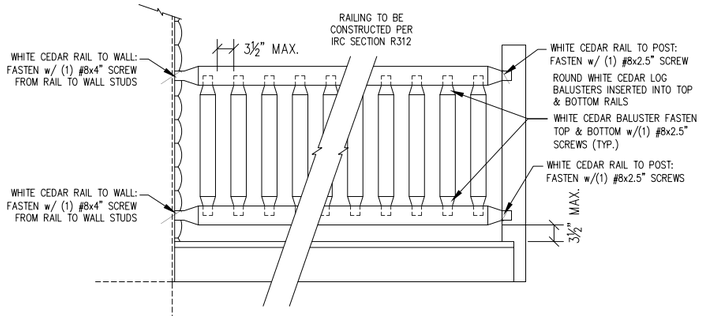

TYPICAL RAILING DETAIL

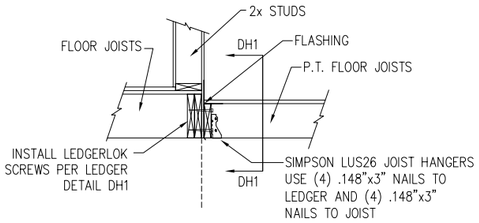

DETAIL DH

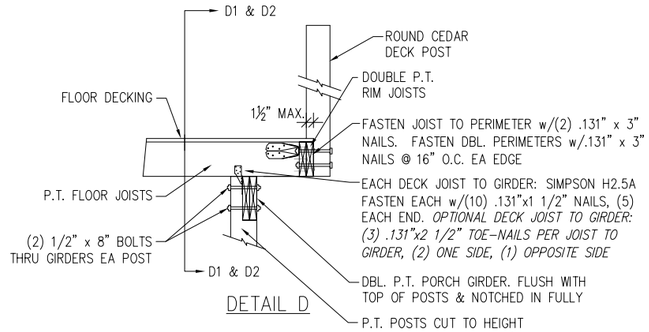

DETAIL D

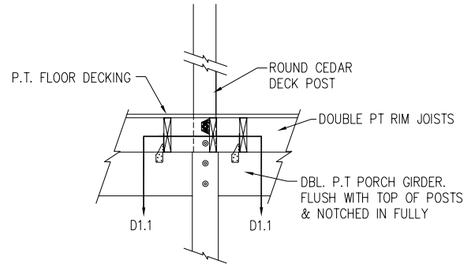

DETAIL D1

INTERMEDIATE POSTS

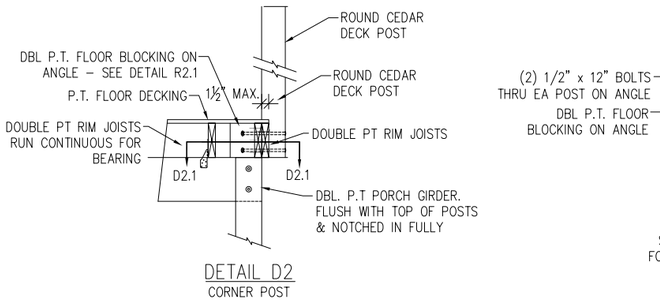

DETAIL D2

CORNER POST

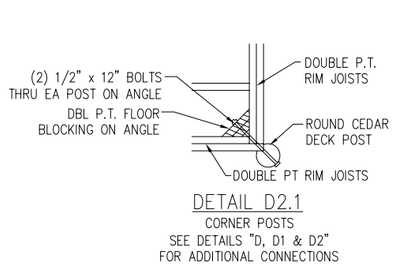

DETAIL D2.1

CORNER POSTS
SEE DETAILS "D, D1 & D2" FOR ADDITIONAL CONNECTIONS

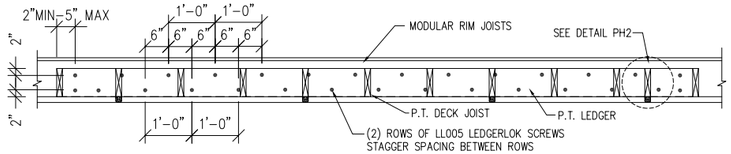

DETAIL DH1

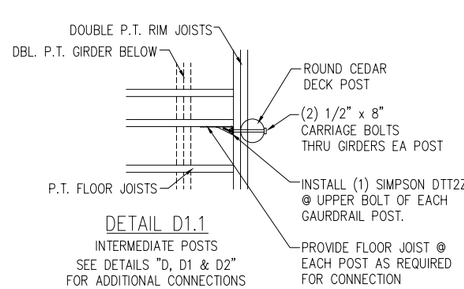

DETAIL D1.1

INTERMEDIATE POSTS
SEE DETAILS "D, D1 & D2" FOR ADDITIONAL CONNECTIONS

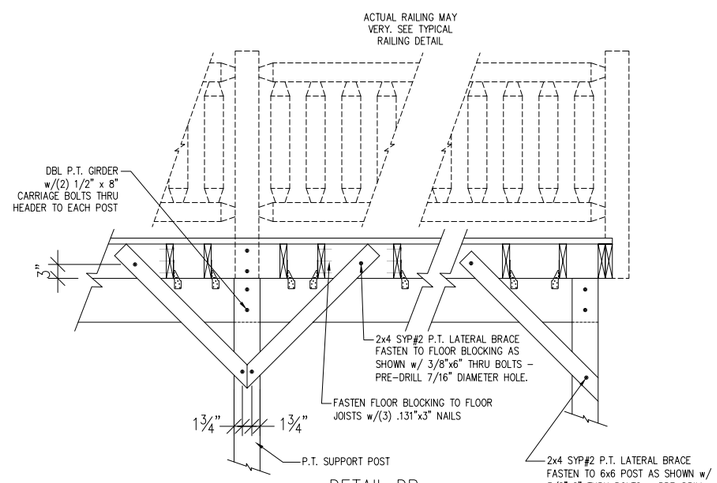

DETAIL DR

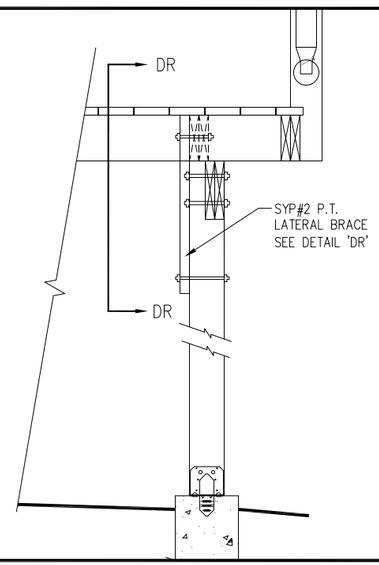

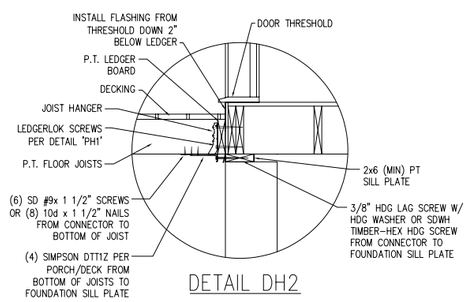

DETAIL DH2

PFS APPROVED
DATE 3/23/21
PFS CORPORATION
Bloomsburg, PA

NOTES:

1. ALL EXPOSED LUMBER TO BE OF NATURALLY DURABLE WOOD OR WOOD THAT IS PRESERVATIVE-TREATED IN ACCORDANCE WITH AWPA U1. PRESERVATIVES SHALL BE LISTED IN SECTION 4 OF AWPA U1.
2. ALL LUMBER THAT IS IN CONTACT WITH CONCRETE OR THE GROUND MUST BE APPROVED PRESSURE-PRESERVATIVE-TREATED WOOD SUITABLE FOR GROUND CONTACT USE.
3. ALL SUPPORT COLUMNS SHALL BE APPROVED WOOD OF NATURAL DECAY RESISTANCE OR APPROVED PRESSURE-PRESERVATIVE-TREATED WOOD.
4. ALL FIELD CUT ENDS, NOTCHES, DRILLED HOLES OF PRESERVATIVE-TREATED WOOD SHALL BE TREATED IN THE FIELD IN ACCORDANCE WITH AWPA M4.
5. ALL NAILS USED IN THE CONSTRUCTION OF PORCHES AND DECKS SHALL BE THREADED AND MEET THE REQUIREMENTS OF ASTM F 1667. THREADED NAILS AS STATED IN THIS DOCUMENT INCLUDE HELICAL (SPIRAL) AND ANNULAR (RINK SHANK) NAILS. WOOD SCREWS SHALL MEET THE REQUIREMENTS OF ANSI/ASME B18.6.1. BOLTS AND LAG SCREWS SHALL MEET THE REQUIREMENTS OF ANSI/ASME B18.2.1.
6. FLASHING SHALL BE CORROSION-RESISTANT METAL OF A MINIMUM NOMINAL THICKNESS OF 0.019 INCHES OR AN APPROVED NON-METALLIC MATERIAL.
   6.1. ALUMINUM SHOULD NOT BE USED IN DIRECT CONTACT WITH LUMBER TREATED WITH PRESERVATIVES THAT CONTAIN COPPER SUCH AS ACQ, COPPER AZOLE, OR ACZA.
7. ALL SCREWS, BOLTS, NAILS, NUTS AND WASHERS FOR USE WITH PRESERVATIVE TREATED WOOD SHALL BE HOT-DIPPED ZINC-COATED GALVANIZED STEEL, STAINLESS STEEL, SILICON BRONZE, OR COPPER. FASTENERS SHALL BE HOT DIPPED GALVANIZED AND SHALL MEET THE REQUIREMENTS OF ASTM A 153, CLASS D FOR FASTENERS 3/8" DIAMETER AND SMALLER, OR CLASS C FOR FASTENERS WITH DIAMETERS OVER 3/8".
8. FASTENERS OTHER THAN NAILS AND TIMBER RIVETS SHALL BE PERMITTED TO BE OF MECHANICALLY DEPOSITED ZINC-COATED STEEL WITH COATING WEIGHTS IN ACCORDANCE WITH ASTM B 695, CLASS 55, MINIMUM.
9. ALL HARDWARE (JOIST HANGERS, CAST-IN-PLACE POST ANCHORS, ETC.) THAT IS EXPOSED TO WEATHER OR IN CONTACT WTIH GROUND, CONCRETE OR PRESSURE TREATED LUMBER SHALL BE GALVANIZED OR SHALL BE STAINLESS STEEL. HARDWARE TO BE HOT DIPPED GALVANIZED PRIOR TO FABRICATION SHALL MEET ASTM A 653, G-185 COATING. HARDWARE TO BE HOT DIPPED GALVANIZED AFTER FABRICATION SHALL MEET ASTM A123.
10. FASTENERS AND CONNECTORS EXPOSED TO SALT WATER OR LOCATED WITHIN 300 FEET OF A SALT WATER SHORELINE SHALL BE STAINLESS STEEL GRADE 304 OR 316.
11. ALL OTHER COATED OR NON-FERROUS FASTENERS OR HARDWARE SHALL BE AS APPROVED BY THE AUTHORITY HAVING JURISDICTION.
12. HOT-DIPPED ZINC-COATED GALVANIZED STEEL CONNECTORS ARE REQUIRED AT ANY CONNECTIONS INTO CONCRETE
13. FASTENERS AND CONNECTORS INSTALLED IN TREATED LUMBER OTHER THAN MATERIAL WITH A CHEMICAL RETENTION GREATER THAN AWPA OR UC4A SHALL BE STAINLESS STEEL GRADE 304 OR 316.

COZY CABINS LLC
455 FARMERSVILLE RD.
NEW HOLLAND, PA 17557
PHONE: 717-354-3278
FAX: 717-354-0015
WWW.MYCOZYCABINS.COM

THESE DRAWINGS HAVE BEEN PREPARED BY
GLENCO, INC.

THIS DOCUMENT AND THE SUBJECT MATTER CONTAINED HEREIN IS PROPRIETARY AND MAY NOT BE REPRODUCED WITHOUT WRITTEN PERMISSION
www.glencoinc.com

CUSTOMER/PROJECT:
NICOLE HIDALGO
22 MUSTANG ROAD
LAKE ARIEL, PA 18436

BUILDER:
COZY CABINS, LLC
455 FARMERSVILLE RD.
NEW HOLLAND, PA 17557

REV#	DATE	REVISIONS	BY

DRAWN BY: NKG
DATE: 01/21/21
SCALE: NTS
CHECKED BY: LDZ

FILE: CC-729
SQ.FT.: 1,660
STATE: PA
TYPE: CAPE
MODEL: CHALET
DRAWING: DECK CONNECTION DETAILS
SHEET: 12

Generated by RES*check-Web* Software

Compliance Certificate

Project Nicole Hidalgo (CC-729)

Energy Code:	**2015 IECC**
Location:	**Hawley, Pennsylvania**
Construction Type:	**Single-family**
Project Type:	**New Construction**
Conditioned Floor Area:	**1,660 ft2**
Glazing Area	**17%**
Climate Zone:	**6 (7100 HDD)**
Permit Date:	
Permit Number:	

PFS APPROVED
DATE 3/23/21
PFS CORPORATION
Bloomsburg, PA

Construction Site:
22 Mustang Rd.
Lake Ariel, PA 18436

Owner/Agent:
Cozy Cabins, LLC
455 Farmersville Road
New Holland, PA 17557

Designer/Contractor:
Cozy Cabins, LLC
455 Farmersville Road
New Holland, PA 17557

Compliance: Passes using UA trade-off

Compliance: **1.1% Better Than Code** Maximum UA: **276** Your UA: **273**

The % Better or Worse Than Code Index reflects how close to compliance the house is based on code trade-off rules.
It DOES NOT provide an estimate of energy use or cost relative to a minimum-code home.

Envelope Assemblies

Assembly	Gross Area or Perimeter	Cavity R-Value	Cont. R-Value	U-Factor	UA
Cathedral Ceiling: Cathedral Ceiling	1,039	49.0	0.0	0.022	23
Skylight: Velux 2448: Vinyl/Fiberglass Frame:Double Pane with Low-E	7			0.410	3
Flat Ceiling: Raised or Energy Truss	658	37.0	0.0	0.026	17
Front Wall: Wood Frame, 16" o.c.	392	21.0	0.0	0.057	13
Door: PV 7280-PATIO: Glass	40			0.250	10
Door: PV 7280-PATIO: Glass	40			0.250	10
Window: Vista Glass (28'): Vinyl/Fiberglass Frame, Double Pane with Low-E	78			0.280	22
Right Wall: Wood Frame, 16" o.c.	453	21.0	0.0	0.057	22
Door: PV 3680-9L: Solid	22			0.190	4
Window: PV 3048: Vinyl/Fiberglass Frame, Double Pane with Low-E	10			0.260	3
Window: PV 3036 CSMT: Vinyl/Fiberglass Frame, Double Pane with Low-E	8			0.220	2
Window: PV 3048: Vinyl/Fiberglass Frame, Double Pane with Low-E	10			0.260	3
Window: PV 3048: Vinyl/Fiberglass Frame, Double Pane with Low-E	10			0.260	3
Window: PV 3048: Vinyl/Fiberglass Frame, Double Pane with Low-E	10			0.260	3
Back Wall: Wood Frame, 16" o.c.	227	21.0	0.0	0.057	11
Window: PV 3860: Vinyl/Fiberglass Frame, Double Pane with Low-E	16			0.260	4
Window: PV 3048: Vinyl/Fiberglass Frame, Double Pane with Low-E	10			0.260	3

Assembly	Gross Area or Perimeter	Cavity R-Value	Cont. R-Value	U-Factor	UA
Left Wall: Wood Frame, 16" o.c.	453	21.0	0.0	0.057	22
Window: PV 3048: Vinyl/Fiberglass Frame, Double Pane with Low-E	10			0.260	3
Window: PV 3860: Vinyl/Fiberglass Frame, Double Pane with Low-E	16			0.260	4
Window: PV 3860: Vinyl/Fiberglass Frame, Double Pane with Low-E	16			0.260	4
Window: PV 9048-3: Vinyl/Fiberglass Frame, Double Pane with Low-E	30			0.260	8
Stairway Walls: Wood Frame, 16" o.c.	112	13.0	0.0	0.082	8
Door: 3080-INT (solid wood): Solid	18			0.500	9
Loft Wall: Wood Frame, 16" o.c.	163	21.0	0.0	0.057	8
Door: 3080-INT (solid wood): Solid	18			0.500	9
Stair Ceiling: All-Wood Joist/Truss, Over Unconditioned Space	40	21.0	0.0	0.044	2
Floor: All-Wood Joist/Truss, Over Unconditioned Space	1,416	35.0	0.0	0.028	40

Compliance Statement: The proposed building design described here is consistent with the building plans, specifications, and other calculations submitted with the permit application. The proposed building has been designed to meet the 2015 IECC requirements in RES*check* Version : REScheck-Web and to comply with the mandatory requirements listed in the RES*check* Inspection Checklist.

Name - Title | Signature | Date

Project Notes:

Hawley used on account of Lake Ariel not being in REScheck.

PFS APPROVED
DATE 3/23/21
PFS CORPORATION
Bloomsburg, PA

RES*check* Software Version : REScheck-Web

Inspection Checklist

Energy Code: 2015 IECC

Requirements: 0.0% were addressed directly in the RES*check* software

Text in the "Comments/Assumptions" column is provided by the user in the REScheck Requirements screen. For each requirement, the user certifies that a code requirement will be met and how that is documented, or that an exception is being claimed. Where compliance is itemized in a separate table, a reference to that table is provided.

Section # & Req.ID	Pre-Inspection/Plan Review	Plans Verified Value	Field Verified Value	Complies?	Comments/Assumptions
103.1, 103.2 [PR1][1]	Construction drawings and documentation demonstrate energy code compliance for the building envelope. Thermal envelope represented on construction documents.			☐Complies ☐Does Not ☐Not Observable ☐Not Applicable	
103.1, 103.2, 403.7 [PR3][1]	Construction drawings and documentation demonstrate energy code compliance for lighting and mechanical systems. Systems serving multiple dwelling units must demonstrate compliance with the IECC Commercial Provisions.			☐Complies ☐Does Not ☐Not Observable ☐Not Applicable	
302.1, 403.7 [PR2][2]	Heating and cooling equipment is sized per ACCA Manual S based on loads calculated per ACCA Manual J or other methods approved by the code official.	Heating: Btu/hr____ Cooling: Btu/hr____	Heating: Btu/hr____ Cooling: Btu/hr____	☐Complies ☐Does Not ☐Not Observable ☐Not Applicable	

Additional Comments/Assumptions:

PFS APPROVED
DATE 3/23/21
PFS CORPORATION
Bloomsburg, PA

1	High Impact (Tier 1)	2	Medium Impact (Tier 2)	3	Low Impact (Tier 3)

Section # & Req.ID	Foundation Inspection	Complies?	Comments/Assumptions
303.2.1 [FO11][2]	A protective covering is installed to protect exposed exterior insulation and extends a minimum of 6 in. below grade.	☐Complies ☐Does Not ☐Not Observable ☐Not Applicable	
403.9 [FO12][2]	Snow- and ice-melting system controls installed.	☐Complies ☐Does Not ☐Not Observable ☐Not Applicable	

Additional Comments/Assumptions:

PFS APPROVED
DATE 3/23/21
PFS CORPORATION
Bloomsburg, PA

1	High Impact (Tier 1)	2	Medium Impact (Tier 2)	3	Low Impact (Tier 3)

Section # & Req.ID	Framing / Rough-In Inspection	Plans Verified Value	Field Verified Value	Complies?	Comments/Assumptions
402.1.1, 402.3.4 [FR1][1]	Door U-factor.	U-____	U-____	☐Complies ☐Does Not ☐Not Observable ☐Not Applicable	*See the Envelope Assemblies table for values.*
402.1.1, 402.3.1, 402.3.3, 402.5 [FR2][1]	Glazing U-factor (area-weighted average).	U-____	U-____	☐Complies ☐Does Not ☐Not Observable ☐Not Applicable	*See the Envelope Assemblies table for values.*
303.1.3 [FR4][1]	U-factors of fenestration products are determined in accordance with the NFRC test procedure or taken from the default table.			☐Complies ☐Does Not ☐Not Observable ☐Not Applicable	
402.1.1, 402.3.3, 402.3.6, 402.5 [FR5][1]	Skylight U-factor.	U-____	U-____	☐Complies ☐Does Not ☐Not Observable ☐Not Applicable	*See the Envelope Assemblies table for values.*
402.4.1.1 [FR23][1]	Air barrier and thermal barrier installed per manufacturer's instructions.			☐Complies ☐Does Not ☐Not Observable ☐Not Applicable	
402.4.3 [FR20][1]	Fenestration that is not site built is listed and labeled as meeting AAMA /WDMA/CSA 101/I.S.2/A440 or has infiltration rates per NFRC 400 that do not exceed code limits.			☐Complies ☐Does Not ☐Not Observable ☐Not Applicable	
402.4.5 [FR16][2]	IC-rated recessed lighting fixtures sealed at housing/interior finish and labeled to indicate ≤2.0 cfm leakage at 75 Pa.			☐Complies ☐Does Not ☐Not Observable ☐Not Applicable	
403.3.1 [FR12][1]	Supply and return ducts in attics insulated >= R-8 where duct is >= 3 inches in diameter and >= R-6 where < 3 inches. Supply and return ducts in other portions of the building insulated >= R-6 for diameter >= 3 inches and R-4.2 for < 3 inches in diameter.			☐Complies ☐Does Not ☐Not Observable ☐Not Applicable	
403.3.5 [FR15][3]	Building cavities are not used as ducts or plenums.			☐Complies ☐Does Not ☐Not Observable ☐Not Applicable	
403.4 [FR17][2]	HVAC piping conveying fluids above 105 ºF or chilled fluids below 55 ºF are insulated to ≥R-3.	R-____	R-____	☐Complies ☐Does Not ☐Not Observable ☐Not Applicable	
403.4.1 [FR24][1]	Protection of insulation on HVAC piping.			☐Complies ☐Does Not ☐Not Observable ☐Not Applicable	

PFS APPROVED
DATE 3/23/21
PFS CORPORATION
Bloomsburg, PA

1	High Impact (Tier 1)	2	Medium Impact (Tier 2)	3	Low Impact (Tier 3)

Section # & Req.ID	Framing / Rough-In Inspection	Plans Verified Value	Field Verified Value	Complies?	Comments/Assumptions
403.5.3 [FR18][2]	Hot water pipes are insulated to ≥R-3.	R-____	R-____	☐Complies ☐Does Not ☐Not Observable ☐Not Applicable	
403.6 [FR19][2]	Automatic or gravity dampers are installed on all outdoor air intakes and exhausts.			☐Complies ☐Does Not ☐Not Observable ☐Not Applicable	

Additional Comments/Assumptions:

PFS APPROVED
DATE 3/23/21
PFS CORPORATION
Bloomsburg, PA

1	High Impact (Tier 1)	2	Medium Impact (Tier 2)	3	Low Impact (Tier 3)

Section # & Req.ID	Insulation Inspection	Plans Verified Value	Field Verified Value	Complies?	Comments/Assumptions
303.1 [IN13][2]	All installed insulation is labeled or the installed R-values provided.			☐Complies ☐Does Not ☐Not Observable ☐Not Applicable	
402.1.1, 402.2.6 [IN1][1]	Floor insulation R-value.	R-____ ☐ Wood ☐ Steel	R-____ ☐ Wood ☐ Steel	☐Complies ☐Does Not ☐Not Observable ☐Not Applicable	*See the Envelope Assemblies table for values.*
303.2, 402.2.7 [IN2][1]	Floor insulation installed per manufacturer's instructions and in substantial contact with the underside of the subfloor, or floor framing cavity insulation is in contact with the top side of sheathing, or continuous insulation is installed on the underside of floor framing and extends from the bottom to the top of all perimeter floor framing members.			☐Complies ☐Does Not ☐Not Observable ☐Not Applicable	
402.1.1, 402.2.5, 402.2.6 [IN3][1]	Wall insulation R-value. If this is a mass wall with at least ½ of the wall insulation on the wall exterior, the exterior insulation requirement applies (FR10).	R-____ ☐ Wood ☐ Mass ☐ Steel	R-____ ☐ Wood ☐ Mass ☐ Steel	☐Complies ☐Does Not ☐Not Observable ☐Not Applicable	*See the Envelope Assemblies table for values.*
303.2 [IN4][1]	Wall insulation is installed per manufacturer's instructions.			☐Complies ☐Does Not ☐Not Observable ☐Not Applicable	

Additional Comments/Assumptions:

PFS APPROVED
DATE 3/23/21
PFS CORPORATION
Bloomsburg, PA

1	High Impact (Tier 1)	2	Medium Impact (Tier 2)	3	Low Impact (Tier 3)

Section # & Req.ID	Final Inspection Provisions	Plans Verified Value	Field Verified Value	Complies?	Comments/Assumptions
402.1.1, 402.2.1, 402.2.2, 402.2.6 [FI1][1]	Ceiling insulation R-value.	R-____ ☐ Wood ☐ Steel	R-____ ☐ Wood ☐ Steel	☐Complies ☐Does Not ☐Not Observable ☐Not Applicable	*See the Envelope Assemblies table for values.*
303.1.1.1, 303.2 [FI2][1]	Ceiling insulation installed per manufacturer's instructions. Blown insulation marked every 300 ft².			☐Complies ☐Does Not ☐Not Observable ☐Not Applicable	
402.2.3 [FI22][2]	Vented attics with air permeable insulation include baffle adjacent to soffit and eave vents that extends over insulation.			☐Complies ☐Does Not ☐Not Observable ☐Not Applicable	
402.2.4 [FI3][1]	Attic access hatch and door insulation ≥R-value of the adjacent assembly.	R-____	R-____	☐Complies ☐Does Not ☐Not Observable ☐Not Applicable	
402.4.1.2 [FI17][1]	Blower door test @ 50 Pa. <=5 ach in Climate Zones 1-2, and <=3 ach in Climate Zones 3-8.	ACH 50 =____	ACH 50 =____	☐Complies ☐Does Not ☐Not Observable ☐Not Applicable	
403.3.4 [FI4][1]	Duct tightness test result of <=4 cfm/100 ft2 across the system or <=3 cfm/100 ft2 without air handler @ 25 Pa. For rough-in tests, verification may need to occur during Framing Inspection.	____ cfm/100 ft²	____ cfm/100 ft²	☐Complies ☐Does Not ☐Not Observable ☐Not Applicable	
403.3.3 [FI27][1]	Ducts are pressure tested to determine air leakage with either: Rough-in test: Total leakage measured with a pressure differential of 0.1 inch w.g. across the system including the manufacturer's air handler enclosure if installed at time of test. Postconstruction test: Total leakage measured with a pressure differential of 0.1 inch w.g. across the entire system including the manufacturer's air handler enclosure.	____ cfm/100 ft²	____ cfm/100 ft²	☐Complies ☐Does Not ☐Not Observable ☐Not Applicable	
403.3.2.1 [FI24][1]	Air handler leakage designated by manufacturer at <=2% of design air flow.			☐Complies ☐Does Not ☐Not Observable ☐Not Applicable	
403.1.1 [FI9][2]	Programmable thermostats installed for control of primary heating and cooling systems and initially set by manufacturer to code specifications.			☐Complies ☐Does Not ☐Not Observable ☐Not Applicable	
403.1.2 [FI10][2]	Heat pump thermostat installed on heat pumps.			☐Complies ☐Does Not ☐Not Observable ☐Not Applicable	
403.5.1 [FI11][2]	Circulating service hot water systems have automatic or accessible manual controls.			☐Complies ☐Does Not ☐Not Observable ☐Not Applicable	

PFS APPROVED
DATE 3/23/21
PFS CORPORATION
Bloomsburg, PA

1	High Impact (Tier 1)	2	Medium Impact (Tier 2)	3	Low Impact (Tier 3)

Section # & Req.ID	Final Inspection Provisions	Plans Verified Value	Field Verified Value	Complies?	Comments/Assumptions
403.6.1 [FI25][2]	All mechanical ventilation system fans not part of tested and listed HVAC equipment meet efficacy and air flow limits.			☐Complies ☐Does Not ☐Not Observable ☐Not Applicable	
403.2 [FI26][2]	Hot water boilers supplying heat through one- or two-pipe heating systems have outdoor setback control to lower boiler water temperature based on outdoor temperature.			☐Complies ☐Does Not ☐Not Observable ☐Not Applicable	
403.5.1.1 [FI28][2]	Heated water circulation systems have a circulation pump. The system return pipe is a dedicated return pipe or a cold water supply pipe. Gravity and thermos-syphon circulation systems are not present. Controls for circulating hot water system pumps start the pump with signal for hot water demand within the occupancy. Controls automatically turn off the pump when water is in circulation loop is at set-point temperature and no demand for hot water exists.			☐Complies ☐Does Not ☐Not Observable ☐Not Applicable	
403.5.1.2 [FI29][2]	Electric heat trace systems comply with IEEE 515.1 or UL 515. Controls automatically adjust the energy input to the heat tracing to maintain the desired water temperature in the piping.			☐Complies ☐Does Not ☐Not Observable ☐Not Applicable	
403.5.2 [FI30][2]	Water distribution systems that have recirculation pumps that pump water from a heated water supply pipe back to the heated water source through a cold water supply pipe have a demand recirculation water system. Pumps have controls that manage operation of the pump and limit the temperature of the water entering the cold water piping to 104ºF.			☐Complies ☐Does Not ☐Not Observable ☐Not Applicable	PFS APPROVED DATE 3/23/21 PFS CORPORATION Bloomsburg, PA
403.5.4 [FI31][2]	Drain water heat recovery units tested in accordance with CSA B55.1. Potable water-side pressure loss of drain water heat recovery units < 3 psi for individual units connected to one or two showers. Potable water-side pressure loss of drain water heat recovery units < 2 psi for individual units connected to three or more showers.			☐Complies ☐Does Not ☐Not Observable ☐Not Applicable	
404.1 [FI6][1]	75% of lamps in permanent fixtures or 75% of permanent fixtures have high efficacy lamps. Does not apply to low-voltage lighting.			☐Complies ☐Does Not ☐Not Observable ☐Not Applicable	
404.1.1 [FI23][3]	Fuel gas lighting systems have no continuous pilot light.			☐Complies ☐Does Not ☐Not Observable ☐Not Applicable	

1	High Impact (Tier 1)	2	Medium Impact (Tier 2)	3	Low Impact (Tier 3)

Section # & Req.ID	Final Inspection Provisions	Plans Verified Value	Field Verified Value	Complies?	Comments/Assumptions
401.3 [FI7][2]	Compliance certificate posted.			☐Complies ☐Does Not ☐Not Observable ☐Not Applicable	
303.3 [FI18][3]	Manufacturer manuals for mechanical and water heating systems have been provided.			☐Complies ☐Does Not ☐Not Observable ☐Not Applicable	

Additional Comments/Assumptions:

PFS APPROVED
DATE 3/23/21
PFS CORPORATION
Bloomsburg, PA

1	High Impact (Tier 1)	2	Medium Impact (Tier 2)	3	Low Impact (Tier 3)

2015 IECC Energy Efficiency Certificate

Insulation Rating	R-Value
Above-Grade Wall	21.00
Below-Grade Wall	0.00
Floor	35.00
Ceiling / Roof	49.00
Ductwork (unconditioned spaces):	_____

Glass & Door Rating	U-Factor	SHGC
Window	0.28	0.23
Door	0.25	0.25
Skylight	0.41	0.26

Heating & Cooling Equipment	Efficiency
Heating System:_____	_____
Cooling System:_____	_____
Water Heater:_____	_____

Name: _____ **Date:**_____

Comments

PFS APPROVED
DATE 3/23/21
PFS CORPORATION
Bloomsburg, PA

Job	Truss	Truss Type	Qty	Ply	
102048	D1048841	ROOF TRUSS	1	1	Cozy Cabins 212

UFP Industries Inc., Grand Rapids, MI 49525, Steve Minahan — 8.220 e Aug 13 2018 MiTek Industries, Inc. Thu Jul 9 07:50:08 2020 Page 1 of 2

Copyright ©2020 UFP Industries, Inc. All Rights Reserved

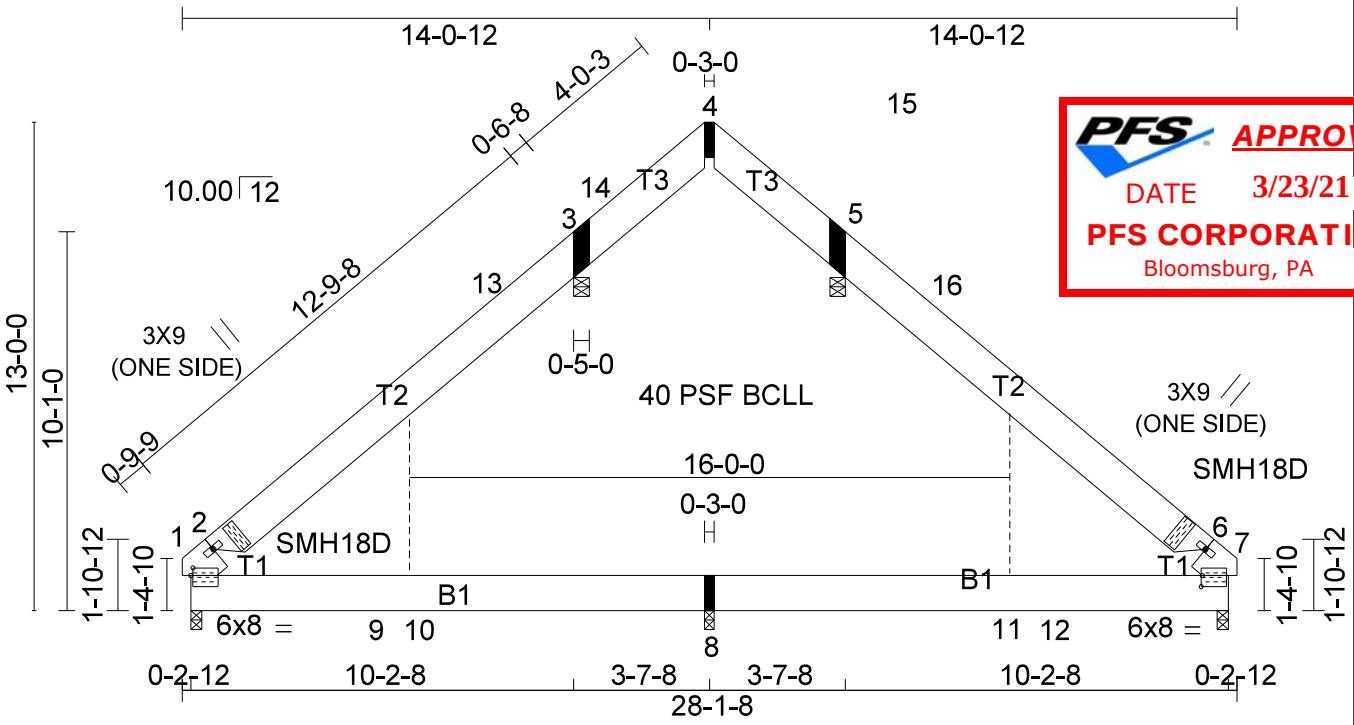

PFS APPROVED
DATE 3/23/21
PFS CORPORATION
Bloomsburg, PA

Plate Offsets (X,Y)-- [1:0-0-11,0-2-7], [2:0-1-4,0-1-0], [6:19-9-13,18-2-9], [7:0-0-5,0-3-9]

SPACING-: 2-0-0	**SPACING-:** 1-4-0	**SPACING-:** 1-0-0	**SPACING-** 2-0-0	**CSL**	**DEFL.** in (loc) l/defl L/d	**PLATES**	**GRIP**
LOADING (psf)	**LOADING** (psf)	**LOADING** (psf)	Plate Grip DOL 1.15	TC 0.43	Vert(LL) -0.27 7-8 >605 240	MT20	137/130
TCLL 42.9	TCLL 64.4	TCLL 85.9	Lumber DOL 1.15	BC 0.95	Vert(CT) -0.33 7-8 >491 180	MT18HS	137/130
(Ground Snow=60.0)	(Ground Snow=90.0)	(Ground Snow=120.0)	Rep Stress Incr YES	WB 0.00	Horz(CT) 0.07 3 n/a n/a		
TCDL 10.0	TCDL 15.0	TCDL 20.0	Code IBC2018/TPI2014	Matrix-R		Weight: 206 lb	
BCLL 0.0 *	BCLL 0.0 *	BCLL 0.0 *				FT = 0%	
BCDL 10.0	BCDL 15.0	BCDL 20.0					

LUMBER-
TOP CHORD 2x12 SPF No.2 *Except*
T1: 1.5 x 11.25 Murphy LVL 2.0E
BOT CHORD 2x12 SPF No.2

BRACING-
TOP CHORD Structural wood sheathing directly applied or 6-0-0 oc purlins. [P]
BOT CHORD Rigid ceiling directly applied or 2-2-0 oc bracing.

REACTIONS. (lb/size) 8=269/0-3-0, 1=877/0-3-8, 7=877/0-3-8, 3=712/0-5-0, 5=712/0-5-0
Max Horz 1=-383(LC 7)
Max Uplift 3=-424(LC 9), 5=-423(LC 10)
Max Grav 8=1694(LC 16), 1=1036(LC 3), 7=1034(LC 4), 3=977(LC 14), 5=980(LC 15)

FORCES. (lb) - Maximum Compression/Maximum Tension
TOP CHORD 1-2=-802/12, 2-13=-638/70, 3-13=-222/84, 3-14=-463/86, 4-14=-305/96, 4-15=-309/97, 5-15=-459/87, 5-16=-223/85, 6-16=-621/70, 6-7=-799/12
BOT CHORD 1-9=-151/405, 9-10=-151/405, 8-10=-151/405, 8-11=-151/405, 11-12=-151/405, 7-12=-151/405

REQUIRED FIELD JOINT CONNECTIONS - Maximum Compression (lb)/ Maximum Tension (lb)/ Maximum Shear (lb)/ Maximum Moment (lb-in)
3=502/107/517/0, 4=260/98/243/0, 5=498/116/522/0, 8=151/405/847/0

NOTES- (15-16)
1) Wind: ASCE 7-16; Vult=115mph (3-second gust) Vasd=91mph @24in o.c.; TCDL=3.0psf; BCDL=3.0psf; (Alt. 141mph @16in o.c.; TCDL=4.5psf; BCDL=4.5psf); (Alt. 163mph @12in o.c.; TCDL=6.0psf; BCDL=6.0psf); h=30ft; Cat. II; Exp C; Enclosed; MWFRS (envelope) gable end zone and C-C Exterior(2E) 0-4-6 to 3-4-6, Interior(1) 3-4-6 to 11-1-6, Exterior(2R) 11-1-6 to 17-1-6, Interior(1) 17-1-6 to 24-9-2, Exterior(2E) 24-9-2 to 27-9-2 zone;C-C for members and forces & MWFRS for reactions shown; Lumber DOL=1.60 plate grip DOL=1.60
2) TCLL: ASCE 7-16; Pg=60.0 psf; Ps=42.9 psf (Lum DOL=1.15 Plate DOL=1.15); Is=1.0; Rough Cat C; Partially Exp.; Ce=1.0; Cs=0.93; Ct=1.10
3) Roof design snow load has been reduced to account for slope.
4) Unbalanced snow loads have been considered for this design.
5) All plates are MT20 plates unless otherwise indicated.
6) See HINGE PLATE DETAILS for plate placement.
7) Provisions must be made to prevent lateral movement of hinged member(s) during transportation.
8) All additional member connections shall be provided by others for forces as indicated.
9) This truss has been designed for a 10.0 psf bottom chord live load nonconcurrent with any other live loads.

The professional engineering seal indicates that a licensed professional engineer has designed the truss under the standards referenced within this document, not necessarily the current state building code. The engineering seal is not an approval to use in a specific state. The final determination on whether a truss design is acceptable under the locally adopted building code rest with the building official or designated appointee.

7/9/2020

UFP Industries, Inc.
PHONE (616)-364-6161 FAX (616)-365-0060
2801 EAST BELTLINE RD, NE
GRAND RAPIDS, MI 49525

WARNING - ***Verify design parameters and READ NOTES***
Truss shall not be cut or modified without approval of the truss design engineer.
This component has only been designed for the loads noted on this drawing. Construction and lifting forces have not been considered. The builder is responsible for lifting methods and system design. Builder responsibilities are defined under TPI1. This design is based only upon parameters shown, and is for an individual building component to be installed and loaded vertically. Applicability of design parameters and proper incorporation of component is responsibility of building designer - not truss designer. Bracing shown is for lateral support of individual web members only. Additional temporary bracing to insure stability during construction is the responsibility of the erector. Additional permanent bracing of the overall structure is the responsibility of the building designer. For general guidance regarding fabrication, quality control, storage, delivery, erection and bracing, consult BCSI 1-06 from the Wood Truss Council of America and Truss Plate Institute Recommendation available from WTCA, 6300 Enterprise LN, Madison, WI 53719 J:\support\MitekSupp\templates\ufp.tpe

Job	Truss	Truss Type	Qty	Ply	Cozy Cabins 212
102048	D1048841	ROOF TRUSS	1	1	

Copyright © 2020 UFP Industries, Inc. All Rights Reserved

10) * This truss has been designed for a live load of 20.0psf on the bottom chord in all areas where a rectangle 3-6-0 tall by 2-0-0 wide will fit between the bottom chord and any other members, with BCDL = 10.0psf.
11) Provide mechanical connection (by others) of truss to bearing plate capable of withstanding 424 lb uplift at joint 3 and 423 lb uplift at joint 5.
12) Beveled plate or shim required to provide full bearing surface with truss chord at joint(s) 3, 5.
13) This truss is designed in accordance with the 2018 International Building Code section 2306.1 and referenced standard ANSI/TPI 1.
14) In the LOAD CASE(S) section, loads applied to the face of the truss are noted as front (F) or back (B).
15) Take precaution to keep the chords in plane, any bending or twisting of the hinge plate must be repaired before the building is put into service.
16) The field-installed members are an integral part of the truss design. Retain a design professional to specify final field connections and temporary supports. All field-installed members must be properly fastened prior to applying any loading to the truss. This design anticipates the final set position.
17) Revision of D1048821; updated code.

PFS **APPROVED**
DATE 3/23/21
PFS CORPORATION
Bloomsburg, PA

The professional engineering seal indicates that a licensed professional engineer has designed the truss under the standards referenced within this document, not necessarily the current state building code. The engineering seal is not an approval to use in a specific state. The final determination on whether a truss design is acceptable under the locally adopted building code rest with the building official or designated appointee.

WARNING - ***Verify design parameters and READ NOTES***

UFP Industries, Inc.
PHONE (616)-364-6161 FAX (616)-365-0060
2801 EAST BELTLINE RD, NE
GRAND RAPIDS, MI 49525

Truss shall not be cut or modified without approval of the truss design engineer.
This component has only been designed for the loads noted on this drawing. Construction and lifting forces have not been considered. The builder is responsible for lifting methods and system design. Builder responsibilities are defined under TPI1. This design is based only upon parameters shown, and is for an individual building component to be installed and loaded vertically. Applicability of design parameters and proper incorporation of component is responsibility of building designer - not truss designer. Bracing shown is for lateral support of individual web members only. Additional temporary bracing to insure stability during construction is the responsibility of the erector. Additional permanent bracing of the overall structure is the responsibility of the building designer. For general guidance regarding fabrication, quality control, storage, delivery, erection and bracing, consult BCSI 1-06 from the Wood Truss Council of America and Truss Plate Institute Recommendation available from WTCA, 6300 Enterprise LN, Madison, WI 53719 J:\support\MitekSupp\templates\ufp.tpe

UFP INDUSTRIES

Job	Truss	MFG	Customer
102048	D1048841	212	COZY CABINS

The professional engineering seal indicates that a licensed professional has reviewed the design under the standards referenced within this document, not necessarily the current state building code. The engineering seal is not an approval to use a design in a specific state. The final determination on whether a truss design is acceptable under the locally adopted building code rest with the building official or designated appointee.

PFS **APPROVED**
DATE 3/23/21
PFS CORPORATION
Bloomsburg, PA

Corporate Engineering
2801 East Beltline, NE Grand Rapids, MI 49525-9736 (616) 364-6161 Fax (616) 365-0060
ufpi.com

Job	Truss	Truss Type	Qty	Ply	
102048	D1048943	HOWE	1	1	Cozy Cabins 212

UFP Industries Inc., Grand Rapids, MI 49525, Steve Minahan — 8,220 e Aug 13 2018 MiTek Industries, Inc. Thu Jul 9 08:05:39 2020 Page 1 of 1

Copyright ©2020 UFP Industries, Inc. All Rights Reserved

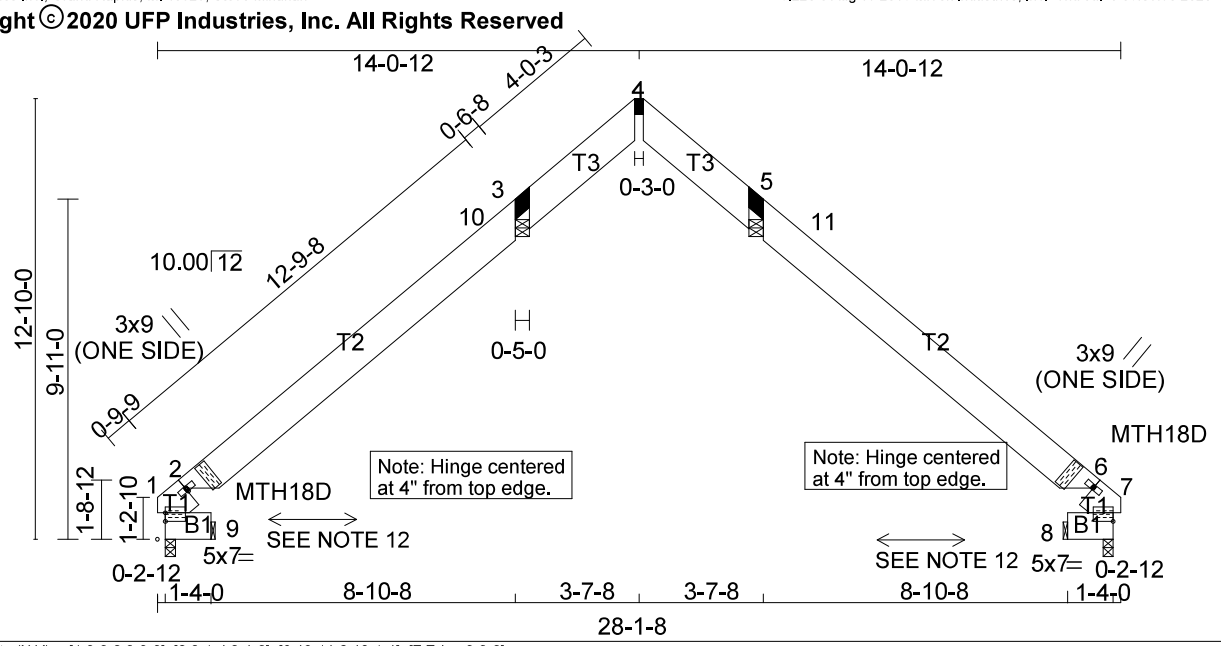

Plate Offsets (X,Y)-- [1:0-0-0,0-3-0], [2:0-1-4,0-1-0], [6:19-11-2,18-1-1], [7:Edge,0-3-0]

SPACING-: 2-0-0	SPACING-: 1-4-0	SPACING-: 1-0-0	SPACING- 2-0-0	CSI	DEFL. in (loc) l/defl L/d	PLATES GRIP
LOADING (psf)	LOADING (psf)	LOADING (psf)	Plate Grip DOL 1.15	TC 0.47	Vert(LL) 0.00 8 >999 240	MT20 137/130
TCLL 42.9	TCLL 64.4	TCLL 85.9	Lumber DOL 1.15	BC 0.16	Vert(CT) 0.00 8 >999 180	MT18HS 137/130
(Ground Snow=60.0)	(Ground Snow=90.0)	(Ground Snow=120.0)	Rep Stress Incr YES	WB 0.00	Horz(CT) 0.01 5 n/a n/a	
TCDL 10.0	TCDL 15.0	TCDL 20.0	Code IBC2018/TPI2014	Matrix-R		Weight: 113 lb
BCLL 0.0 *	BCLL 0.0 *	BCLL 0.0 *				FT = 0%
BCDL 10.0	BCDL 15.0	BCDL 20.0				

LUMBER-
TOP CHORD 2x12 SPF No.2 *Except*
T1: 1.5 x 11.25 Murphy LVL 2.0E
BOT CHORD 2x10 SPF No.2

BRACING-
TOP CHORD Structural wood sheathing directly applied or 6-0-0 oc purlins. [P]
BOT CHORD Rigid ceiling directly applied or 10-0-0 oc bracing.

REACTIONS. (lb/size) 9=-9/Mechanical, 1=837/0-3-8, 7=837/0-3-8, 8=-9/Mechanical, 3=780/0-5-0, 5=780/0-5-0
Max Horz 9=422(LC 9), 8=-422(LC 10)
Max Uplift 9=-417(LC 9), 8=-417(LC 10), 3=-357(LC 9), 5=-356(LC 10)
Max Grav 9=80(LC 7), 1=876(LC 14), 7=870(LC 15), 8=80(LC 8), 3=1044(LC 14), 5=1047(LC 15)

FORCES. (lb) - Maximum Compression/Maximum Tension
TOP CHORD 1-2=-874/0, 2-10=-691/43, 3-10=-230/80, 3-4=-498/76, 4-5=-495/77, 5-11=-232/82, 6-11=-674/44, 6-7=-871/0
BOT CHORD 1-9=-128/422, 7-8=-128/422

REQUIRED FIELD JOINT CONNECTIONS - Maximum Compression (lb)/ Maximum Tension (lb)/ Maximum Shear (lb)/ Maximum Moment (lb-in)
3=540/112/556/0, 4=276/81/257/0, 5=536/121/561/0

NOTES- (16-17)
1) Wind: ASCE 7-16; Vult=115mph (3-second gust) Vasd=91mph @24in o.c.; TCDL=3.0psf; BCDL=3.0psf; (Alt. 141mph @16in o.c.; TCDL=4.5psf; BCDL=4.5psf); (Alt. 163mph @12in o.c.; TCDL=6.0psf; BCDL=6.0psf); h=30ft; Cat. II; Exp C; Enclosed; MWFRS (envelope) gable end zone and C-C Exterior(2) zone;C-C for members and forces & MWFRS for reactions shown; Lumber DOL=1.60 plate grip DOL=1.60
2) TCLL: ASCE 7-16; Pg=60.0 psf; Ps=42.9 psf (Lum DOL=1.15 Plate DOL=1.15); Is=1.0; Rough Cat C; Partially Exp.; Ce=1.0; Cs=0.93; Ct=1.10
3) Roof design snow load has been reduced to account for slope.
4) Unbalanced snow loads have been considered for this design.
5) All plates are MT20 plates unless otherwise indicated.
6) See HINGE PLATE DETAILS for plate placement.
7) Provisions must be made to prevent lateral movement of hinged member(s) during transportation.
8) All additional member connections shall be provided by others for forces as indicated.
9) This truss has been designed for a 10.0 psf bottom chord live load nonconcurrent with any other live loads.
10) * This truss has been designed for a live load of 20.0psf on the bottom chord in all areas where a rectangle 3-6-0 tall by 2-0-0 wide will fit between the bottom chord and any other members.
11) Provide mechanical connection (by others) of truss to bearing plate capable of withstanding 417 lb uplift at joint 9, 417 lb uplift at joint 8, 357 lb uplift at joint 3 and 356 lb uplift at joint 5.
12) Provide support to resist a horizontal force of 422 lbs at joints 8 & 9
13) Beveled plate or shim required to provide full bearing surface with truss chord at joint(s) 3, 5.
14) This truss is designed in accordance with the 2018 International Building Code section 2306.1 and referenced standard ANSI/TPI 1.
15) In the LOAD CASE(S) section, loads applied to the face of the truss are noted as front (F) or back (B).
16) Take precaution to keep the chords in plane, any bending or twisting of the hinge plate must be repaired before the building is put into service.
17) The field-installed members are an integral part of the truss design. Retain a design professional to specify final field connections and temporary supp All field-installed members must be properly fastened prior to applying any loading to the truss. This design anticipates the final set position.
18) Revision of D1048922; updated code.

PFS APPROVED
DATE 3/23/21
PFS CORPORATION
Bloomsburg, PA

COMMONWEALTH OF PENNSYLVANIA
REGISTERED PROFESSIONAL ENGINEER
KEVIN W. FREEMAN
PE 064541 E

The professional engineering seal indicates that a licensed professional engineer has designed the truss under the standards referenced within this document, not necessarily the current state building code. The engineering seal is not an approval to use in a specific state. The final determination on whether a truss design is acceptable under the locally adopted building code rest with the building official or designated appointee.

7/9/2020

WARNING - *Verify design parameters and READ NOTES*

UFP Industries, Inc.
PHONE (616)-364-6161 FAX (616)-365-0060
2801 EAST BELTLINE RD, NE
GRAND RAPIDS, MI 49525

Truss shall not be cut or modified without approval of the truss design engineer.
This component has only been designed for the loads noted on this drawing. Construction and lifting forces have not been considered. The builder is responsible for lifting methods and system design. Builder responsibilities are defined under TPI1. This design is based only upon parameters shown, and is for an individual building component to be installed and loaded vertically. Applicability of design parameters and proper incorporation of component is responsibility of building designer - not truss designer. Bracing shown is for lateral support of individual web members only. Additional temporary bracing to insure stability during construction is the responsibility of the erector. Additional permanent bracing of the overall structure is the responsibility of the building designer. For general guidance regarding fabrication, quality control, storage, delivery, erection and bracing, consult BCSI 1-06 from the Wood Truss Council of America and Truss Plate Institute Recommendation available from WTCA, 6300 Enterprise LN, Madison, WI 53719 J:\support\MitekSupp\templates\ufp.tpe

UFP INDUSTRIES

Job	Truss	MFG	Customer
102048	D1048943	212	COZY CABINS

The professional engineering seal indicates that a licensed professional has reviewed the design under the standards referenced within this document, not necessarily the current state building code. The engineering seal is not an approval to use a design in a specific state. The final determination on whether a truss design is acceptable under the locally adopted building code rest with the building official or designated appointee.

PFS **APPROVED**
DATE 3/23/21
PFS CORPORATION
Bloomsburg, PA

Corporate Engineering
2801 East Beltline, NE Grand Rapids, MI 49525-9736 (616) 364-6161 Fax (616) 365-0060
ufpi.com

Electrical Load Calculation Form:

Date: 3/15/2021 Performed By: GLENCO INC Mfg: **Cozy Cabins, LLC**

Project: CC-729 / Nicole Hidalgo Model: CC-689

Air Conditioning *			0
Central Electric Space Heating	(0	x .65) *	0
Less Than Four Separately Controlled Electric Space Heating Units	(0	x .65) *	0
Four or More Separately Controlled Electric Space Heating Units	(12850	x .40) *	5140

* Use the larger of the air-conditioning or the diversified demand of the heating load.

Other Loads:

		W		L		Watts or Volt-Amps	Circuit Ampacity	Wire Size
General Lighting								
1st Story	(	28	x	54	x 3)	1248	15 A	14-2
2nd Story	(	28	x	11.5	x 3)	966	15 A	14-2
Small Appliances	(	2	x	1500	)	3000	20 A	12-2
Range						11400	40 A	8-3
Refrigerator						1920	20 A	12-2
Washer						1500	20 A	12-2
Dryer						5800	30 A	10-3
Microwave						1200	20 A	12-2
Dishwasher						1200	20 A	12-2
Water Heater						5500	30 A	10-3
Jacuzzi Pump						1200	15 A	14-2
Jacuzzi Heater						1200	15 A	14.2

Subtotal: 36134

First 10 KW of other loads @ 100% = 10000

Remainder of other loads @ 40% (26134 x .40) = 10454

Heat or A/C from Above: 5140 *

Total Calculated Load: = 25594

Required Service Size: 25594 4 240 = 106.6 Amps

Installed Panel Size = 200 Amps

Max panel amps @ 80% = 160 Amps

PFS **APPROVED**
DATE 3/23/21
PFS CORPORATION
Bloomsburg, PA

file name: CC-729 / Nicole Hidalgo

JOB	CC-729 / Nicole Hidalgo		
SHEET NO.	1	OF	1
CALCULATED BY	Glenco	DATE	3/15/2021
CHECKED BY		DATE	

Whole House Ventilation Supply Air Worksheet

Manual J Table 5A

Table 5A
Default Air Change Values for Three or Four Exposures

Construction	Air Changes per Hour (Heating)					Infiltration CFM for One Fireplace*
	Floor Area of Heated Space (SqFt)					
	900 or Less	901 to 1500	1501 to 2000	2001 to 3000	3000 or More	
Tight	0.21	0.16	0.14	0.11	0.10	0
Semi-Tight	0.41	0.31	0.26	0.22	0.19	13
Average	0.61	0.45	0.38	0.32	0.28	20
Semi-Loose	0.95	0.70	0.59	0.49	0.43	27
Loose	1.29	0.94	0.80	0.66	0.58	33

For one additional fireplace, add 7 CFM to the above fireplace values. For two or more additional fireplaces, add 10 CFM (total) to the above.

2015 IRC Table M1507.3.3(1)

2018 IRC Table M1505.4.3(1)

2020 RCNYS Table M1505.4.3(1)

CONTINUOUS WHOLE-HOUSE MECHANICAL VENTILATION SYSTEM AIRFLOW RATE REQUIREMENTS

DWELLING UNIT FLOOR AREA (square feet)	NUMBER OF BEDROOMS				
	0 – 1	2 – 3	4 – 5	6 – 7	> 7
	Airflow in CFM				
< 1,500	30	45	60	75	90
1,501 – 3,000	45	60	75	90	105
3,001 – 4,500	60	75	90	105	120
4,501 – 6,000	75	90	105	120	135
6,001 – 7,500	90	105	120	135	150
> 7,500	105	120	135	150	165

For SI: 1 square foot = 0.0929 m^2, 1 cubic foot per minute = 0.0004719 m^3/s.

Construction:	Semi-Tight	
1st story area sq.ft.	1456	sf
1st story ceiling height	11.37	ft
Total Building sq.ft.	1456	sf
Building volume cu.ft.	16554.7	cf
Air Change/Hr Value	0.31	ACH
(ACH*Volume)/60 min = CFM Provided	85.5	CFM
CFM Required per Table M1507.3.3(1)	45	CFM

PFS APPROVED
DATE 3/23/21
PFS CORPORATION
Bloomsburg, PA

SUPPLY OK

Whole house ventilation exhaust is provided by a continuous bath fan. See electrical plan for the identified fixture location and size.

Project: CC-729 Structural Calcs 03-15-2021 DAK

Location: Basement Steel Beam Spans ABC
Multi-Loaded Multi-Span Beam
[2015 International Building Code(AISC 14th Ed ASD)]
A992-50 W8x31 x 37.0 FT (11.8 + 11.8 + 13.5)
Section Adequate By: 111.8%
Controlling Factor: Moment

StruCalc 9.0

Glenco, Inc.
217 East Main Street
Middleburg, PA 17842

StruCalc Version 10.0.1.6 3/17/2021 7:59:29 AM

DEFLECTIONS

	Left		Center		Right	
Live Load	0.13	IN L/1103	-0.09	IN L/1503	0.20	IN L/806
Dead Load	0.03	in	-0.01	in	0.06	in
Total Load	0.16	IN L/869	-0.10	IN L/1452	0.26	IN L/621

Live Load Deflection Criteria: L/360 Total Load Deflection Criteria: L/240

REACTIONS

	A		B		C		D	
Live Load	6423	lb	16915	lb	33467	lb	18716	lb
Dead Load	2209	lb	5784	lb	12178	lb	6846	lb
Total Load	8632	lb	22699	lb	45645	lb	25562	lb
Bearing Length	0.83	in	0.83	in	0.83	in	0.83	in

BEAM DATA

	Left		Center		Right	
Span Length	11.75	ft	11.75	ft	13.5	ft
Unbraced Length-Top	0	ft	0	ft	0	ft
Unbraced Length-Bottom	11.75	ft	11.75	ft	13.5	ft

STEEL PROPERTIES

W8x31 - A992-50

Properties:

Yield Stress:	Fy =	50	ksi
Modulus of Elasticity:	E =	29000	ksi
Depth:	d =	8	in
Web Thickness:	tw =	0.29	in
Flange Width:	bf =	8	in
Flange Thickness:	tf =	0.44	in
Distance to Web Toe of Fillet:	k =	0.83	in
Moment of Inertia About X-X Axis:	Ix =	110	in4
Section Modulus About X-X Axis:	Sx =	27.5	in3
Plastic Section Modulus About X-X Axis:	Zx =	30.4	in3

Design Properties per AISC 14th Edition Steel Manual:

Flange Buckling Ratio:	FBR =	9.2	
Allowable Flange Buckling Ratio:	AFBR =	9.15	
Web Buckling Ratio:	WBR =	22.25	
Allowable Web Buckling Ratio:	AWBR =	90.55	
Controlling Unbraced Length:	Lb =	13.5	ft
Limiting Unbraced Length -			
for lateral-torsional buckling:	Lp =	7.14	ft
for Eqn. F2-2:	Lr =	24.78	ft
Nominal Flexural Strength w/ safety factor:	Mn =	65816	ft-lb
Controlling Equation:	F2-2		
Web height to thickness ratio:	h/tw =	22.25	
Limiting height to thickness ratio for eqn. G2-2:	h/tw-limit =	53.95	
Cv Factor:	Cv =	1	
Controlling Equation:	G2-2		
Nominal Shear Strength w/ safety factor:	Vn =	45600	lb

Controlling Moment: -31077 ft-lb
Over left support of span 3 (Right Span)
Created by combining all dead loads and live loads on span(s) 2, 3

Controlling Shear: 13500 lb
At left support of span 3 (Right Span)
Created by combining all dead loads and live loads on span(s

Comparisons with required sections:	Req'd	Provided
Moment of Inertia (deflection):	49.15 in4	110 in4
Moment:	-31077 ft-lb	65816 ft-lb
Shear:	13500 lb	45600 lb

LOADING DIAGRAM

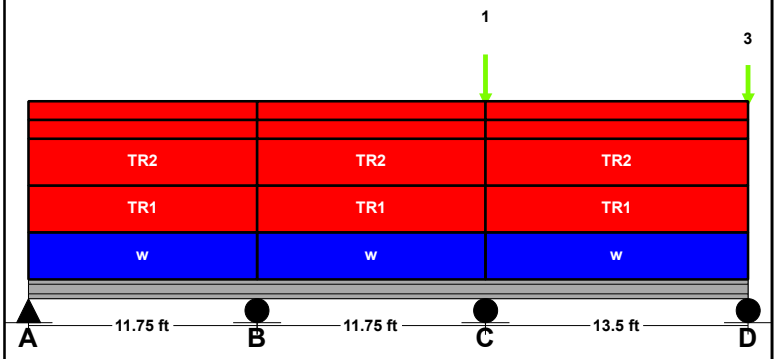

UNIFORM LOADS

	Left		Center		Right	
Uniform Live Load	636	plf	636	plf	636	plf
Uniform Dead Load	212	plf	212	plf	212	plf
Beam Self Weight	31	plf	31	plf	31	plf
Total Uniform Load	879	plf	879	plf	879	plf

POINT LOADS - RIGHT SPAN

Load Number	One *	Two *	Three *	Four *
Live Load	7537 lb	7537 lb	5800 lb	5800 lb
Dead Load	2788 lb	2788 lb	2155 lb	2155 lb
Location	0 ft	0 ft	13.5 ft	13.5 ft

* Load obtained from Load Tracker. See Summary Report for details.

TRAPEZOIDAL LOADS - LEFT SPAN

Load Number	One	Two	Three	Four
Left Live Load	280 plf	280 plf	0 plf	0 plf
Left Dead Load	70 plf	70 plf	40 plf	40 plf
Right Live Load	280 plf	280 plf	0 plf	0 plf
Right Dead Load	70 plf	70 plf	40 plf	40 plf
Load Start	0 ft	0 ft	0 ft	0 ft
Load End	11.75 ft	11.75 ft	11.75 ft	11.75 ft
Load Length	11.75 ft	11.75 ft	11.75 ft	11.75 ft

CENTER SPAN

Load Number	One	Two	Three	Four
Left Live Load	280 plf	280 plf	0 plf	0 plf
Left Dead Load	70 plf	70 plf	40 plf	40 plf
Right Live Load	280 plf	280 plf	0 plf	0 plf
Right Dead Load	70 plf	70 plf	40 plf	40 plf
Load Start	0 ft	0 ft	0 ft	0 ft
Load End	11.75 ft	11.75 ft	11.75 ft	11.75 ft
Load Length	11.75 ft	11.75 ft	11.75 ft	11.75 ft

RIGHT SPAN

Load Number	One	Two	Three	Four
Left Live Load	280 plf	280 plf	0 plf	0 plf
Left Dead Load	70 plf	70 plf	40 plf	40 plf
Right Live Load	280 plf	280 plf	0 plf	0 plf
Right Dead Load	70 plf	70 plf	40 plf	40 plf
Load Start	0 ft	0 ft	0 ft	0 ft
Load End	13.5 ft	13.5 ft	13.5 ft	13.5 ft
Load Length	13.5 ft	13.5 ft	13.5 ft	13.5 ft

PFS APPROVED
DATE 3/23/21
PFS CORPORATION
Bloomsburg, PA

NOTES

Project: CC-729 Structural Calcs 03-15-2021 DAK

Location: Basement Steel Beam Spans ABC - Uplift
Multi-Loaded Multi-Span Beam
[2015 International Building Code(AISC 14th Ed ASD)]
A992-50 W8x31 x 37.0 FT (11.8 + 11.8 + 13.5)
Section Adequate By: 2248.1%
Controlling Factor: Moment

StruCalc 9.0
Glenco, Inc.
217 East Main Street
Middleburg, PA 17842

page of

StruCalc Version 10.0.1.6 3/17/2021 7:59:30 AM

DEFLECTIONS

	Left		Center		Right	
Live Load	0.00	IN L/Infinity	0.00	IN L/Infinity	0.00	IN L/Infinity
Dead Load	0.01	in	0.00	in	0.02	in
Total Load	0.01	IN L/MAX	0.00	IN L/MAX	0.02	IN L/7654

Live Load Deflection Criteria: L/360 Total Load Deflection Criteria: L/240

REACTIONS

	A	B	C	D
Live Load	0 lb	0 lb	0 lb	0 lb
Dead Load	778 lb	2036 lb	2324 lb	893 lb
Total Load	778 lb	2036 lb	2324 lb	893 lb
Uplift (1.5 F.S)	**0 lb**	**0 lb**	**-5552 lb**	**-4317 lb**
Bearing Length	0.83 in	0.83 in	0.83 in	0.83 in

BEAM DATA

	Left	Center	Right
Span Length	11.75 ft	11.75 ft	13.5 ft
Unbraced Length-Top	0 ft	0 ft	0 ft
Unbraced Length-Bottom	11.75 ft	11.75 ft	13.5 ft

LOADING DIAGRAM

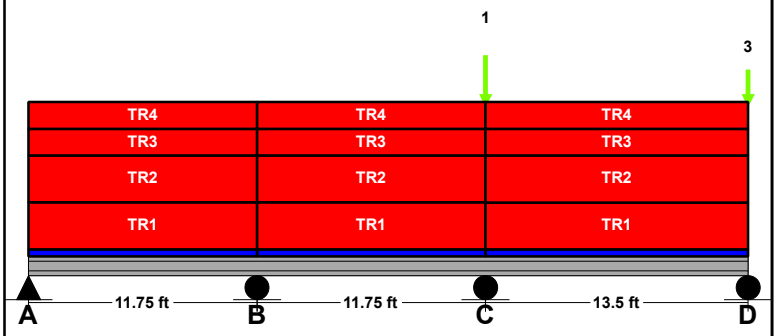

STEEL PROPERTIES

W8x31 - A992-50

Properties:

Yield Stress:	Fy =	50	ksi
Modulus of Elasticity:	E =	29000	ksi
Depth:	d =	8	in
Web Thickness:	tw =	0.29	in
Flange Width:	bf =	8	in
Flange Thickness:	tf =	0.44	in
Distance to Web Toe of Fillet:	k =	0.83	in
Moment of Inertia About X-X Axis:	Ix =	110	in4
Section Modulus About X-X Axis:	Sx =	27.5	in3
Plastic Section Modulus About X-X Axis:	Zx =	30.4	in3

Design Properties per AISC 14th Edition Steel Manual:

Flange Buckling Ratio:	FBR =	9.2	
Allowable Flange Buckling Ratio:	AFBR =	9.15	
Web Buckling Ratio:	WBR =	22.25	
Allowable Web Buckling Ratio:	AWBR =	90.55	
Controlling Unbraced Length:	Lb =	13.5	ft
Limiting Unbraced Length -			
for lateral-torsional buckling:	Lp =	7.14	ft
for Eqn. F2-2:	Lr =	24.78	ft
Nominal Flexural Strength w/ safety factor:	Mn =	65816	ft-lb
Controlling Equation:	F2-2		
Web height to thickness ratio:	h/tw =	22.25	
Limiting height to thickness ratio for eqn. G2-2:	h/tw-limit =	53.95	
Cv Factor:	Cv =	1	
Controlling Equation:	G2-2		
Nominal Shear Strength w/ safety factor:	Vn =	45600	lb

Controlling Moment: -2803 ft-lb
Over left support of span 3 (Right Span)
Created by combining all dead loads and live loads on span(s) 1, 2, 3

Controlling Shear: 1308 lb
At left support of span 3 (Right Span)
Created by combining all dead loads and live loads on span(s

Comparisons with required sections:

	Req'd	Provided
Moment of Inertia (deflection):	3.45 in4	110 in4
Moment:	-2803 ft-lb	65816 ft-lb
Shear:	1308 lb	45600 lb

UNIFORM LOADS

	Left	Center	Right
Uniform Live Load	0 plf	0 plf	0 plf
Uniform Dead Load	0 plf	0 plf	0 plf
Beam Self Weight	31 plf	31 plf	31 plf
Total Uniform Load	31 plf	31 plf	31 plf

POINT LOADS - RIGHT SPAN

Load Number	One	Two	Three	Four
Live Load	-3551 lb	-3551 lb	-2456 lb	-2456 lb
Dead Load	0 lb	0 lb	0 lb	0 lb
Location	0 ft	0 ft	13.5 ft	13.5 ft

TRAPEZOIDAL LOADS - LEFT SPAN

Load Number	One	Two	Three	Four
Left Live Load	0 plf	0 plf	0 plf	0 plf
Left Dead Load	42 plf	42 plf	24 plf	24 plf
Right Live Load	0 plf	0 plf	0 plf	0 plf
Right Dead Load	42 plf	42 plf	24 plf	24 plf
Load Start	0 ft	0 ft	0 ft	0 ft
Load End	11.75 ft	11.75 ft	11.75 ft	11.75 ft
Load Length	11.75 ft	11.75 ft	11.75 ft	11.75 ft

CENTER SPAN

Load Number	One	Two	Three	Four
Left Live Load	0 plf	0 plf	0 plf	0 plf
Left Dead Load	42 plf	42 plf	24 plf	24 plf
Right Live Load	0 plf	0 plf	0 plf	0 plf
Right Dead Load	42 plf	42 plf	24 plf	24 plf
Load Start	0 ft	0 ft	0 ft	0 ft
Load End	11.75 ft	11.75 ft	11.75 ft	11.75 ft
Load Length	11.75 ft	11.75 ft	11.75 ft	11.75 ft

RIGHT SPAN

Load Number	One	Two	Three	Four
Left Live Load	0 plf	0 plf	0 plf	0 plf
Left Dead Load	42 plf	42 plf	24 plf	24 plf
Right Live Load	0 plf	0 plf	0 plf	0 plf
Right Dead Load	42 plf	42 plf	24 plf	24 plf
Load Start	0 ft	0 ft	0 ft	0 ft
Load End	13.5 ft	13.5 ft	13.5 ft	13.5 ft
Load Length	13.5 ft	13.5 ft	13.5 ft	13.5 ft

PFS APPROVED
DATE 3/23/21
PFS CORPORATION
Bloomsburg, PA

NOTES

Project: CC-729 Structural Calcs 03-15-2021 DAK

Location: Basement Steel Beam Spans BCD
Multi-Loaded Multi-Span Beam
[2015 International Building Code(AISC 14th Ed ASD)]
A992-50 W8x31 x 40.25 FT (11.8 + 13.5 + 15)
Section Adequate By: 119.6%
Controlling Factor: Moment

StruCalc 9.0
Glenco, Inc.
217 East Main Street
Middleburg, PA 17842

StruCalc Version 10.0.1.6 3/17/2021 7:59:30 AM

DEFLECTIONS	Left		Center		Right	
Live Load	0.12	IN L/1136	0.14	IN L/1121	0.15	IN L/1189
Dead Load	0.03	in	0.02	in	0.02	in
Total Load	0.15	IN L/940	0.17	IN L/959	0.17	IN L/1066

Live Load Deflection Criteria: L/360 Total Load Deflection Criteria: L/240

REACTIONS	A	B	C	D
Live Load	6355 lb	33127 lb	25835 lb	4804 lb
Dead Load	2053 lb	12250 lb	8935 lb	1386 lb
Total Load	8408 lb	45377 lb	34770 lb	6190 lb
Bearing Length	0.83 in	0.83 in	0.83 in	0.83 in

BEAM DATA	Left	Center	Right
Span Length	11.75 ft	13.5 ft	15 ft
Unbraced Length-Top	0 ft	0 ft	0 ft
Unbraced Length-Bottom	11.75 ft	13.5 ft	15 ft

STEEL PROPERTIES

W8x31 - A992-50

Properties:

Yield Stress:	Fy =	50 ksi
Modulus of Elasticity:	E =	29000 ksi
Depth:	d =	8 in
Web Thickness:	tw =	0.29 in
Flange Width:	bf =	8 in
Flange Thickness:	tf =	0.44 in
Distance to Web Toe of Fillet:	k =	0.83 in
Moment of Inertia About X-X Axis:	Ix =	110 in4
Section Modulus About X-X Axis:	Sx =	27.5 in3
Plastic Section Modulus About X-X Axis:	Zx =	30.4 in3

Design Properties per AISC 14th Edition Steel Manual:

Flange Buckling Ratio:	FBR =	9.2
Allowable Flange Buckling Ratio:	AFBR =	9.15
Web Buckling Ratio:	WBR =	22.25
Allowable Web Buckling Ratio:	AWBR =	90.55
Controlling Unbraced Length:	Lb =	13.5 ft
Limiting Unbraced Length -		
for lateral-torsional buckling:	Lp =	7.14 ft
for Eqn. F2-2:	Lr =	24.78 ft
Nominal Flexural Strength w/ safety factor:	Mn =	65816 ft-lb
Controlling Equation:	F2-2	
Web height to thickness ratio:	h/tw =	22.25
Limiting height to thickness ratio for eqn. G2-2:	h/tw-limit =	53.95
Cv Factor:	Cv =	1
Controlling Equation:	G2-2	
Nominal Shear Strength w/ safety factor:	Vn =	45600 lb

Controlling Moment: -29965 ft-lb
Over left support of span 2 (Center Span)
Created by combining all dead loads and live loads on span(s) 1, 2
Controlling Shear: 12430 lb
At left support of span 2 (Center Span)
Created by combining all dead loads and live loads on span(s

Comparisons with required sections:	Req'd	Provided
Moment of Inertia (deflection):	35.33 in4	110 in4
Moment:	-29965 ft-lb	65816 ft-lb
Shear:	12430 lb	45600 lb

NOTES

LOADING DIAGRAM

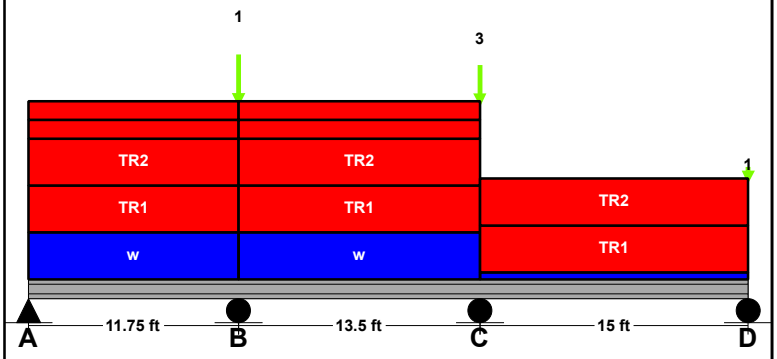

UNIFORM LOADS	Left	Center	Right
Uniform Live Load	636 plf	636 plf	0 plf
Uniform Dead Load	212 plf	212 plf	0 plf
Beam Self Weight	31 plf	31 plf	31 plf
Total Uniform Load	879 plf	879 plf	31 plf

POINT LOADS - CENTER SPAN

Load Number	One *	Two *	Three *	Four *
Live Load	7537 lb	7537 lb	5800 lb	5800 lb
Dead Load	2788 lb	2788 lb	2155 lb	2155 lb
Location	0 ft	0 ft	13.5 ft	13.5 ft

RIGHT SPAN

Load Number	One *	Two *
Live Load	516 lb	516 lb
Dead Load	241 lb	241 lb
Location	15 ft	15 ft

* Load obtained from Load Tracker. See Summary Report for details.

TRAPEZOIDAL LOADS - LEFT SPAN

Load Number	One	Two	Three	Four
Left Live Load	280 plf	280 plf	0 plf	0 plf
Left Dead Load	70 plf	70 plf	40 plf	40 plf
Right Live Load	280 plf	280 plf	0 plf	0 plf
Right Dead Load	70 plf	70 plf	40 plf	40 plf
Load Start	0 ft	0 ft	0 ft	0 ft
Load End	11.75 ft	11.75 ft	11.75 ft	11.75 ft
Load Length	11.75 ft	11.75 ft	11.75 ft	11.75 ft

CENTER SPAN

Load Number	One	Two	Three	Four
Left Live Load	280 plf	280 plf	0 plf	0 plf
Left Dead Load	70 plf	70 plf	40 plf	40 plf
Right Live Load	280 plf	280 plf	0 plf	0 plf
Right Dead Load	70 plf	70 plf	40 plf	40 plf
Load Start	0 ft	0 ft	0 ft	0 ft
Load End	13.5 ft	13.5 ft	13.5 ft	13.5 ft
Load Length	13.5 ft	13.5 ft	13.5 ft	13.5 ft

RIGHT SPAN

Load Number	One	Two
Left Live Load	280 plf	280 plf
Left Dead Load	70 plf	70 plf
Right Live Load	280 plf	280 plf
Right Dead Load	70 plf	70 plf
Load Start	0 ft	0 ft
Load End	15 ft	15 ft
Load Length	15 ft	15 ft

PFS APPROVED
DATE 3/23/21
PFS CORPORATION
Bloomsburg, PA

Project: CC-729 Structural Calcs 03-15-2021 DAK

Location: Basement Steel Beam Spans BCD - Uplift
Multi-Loaded Multi-Span Beam
[2015 International Building Code(AISC 14th Ed ASD)]
A992-50 W8x31 x 36.67 FT (11.8 + 13.5 + 11.4)
Section Adequate By: 2315.9%
Controlling Factor: Moment

StruCalc 9.0
Glenco, Inc.
217 East Main Street
Middleburg, PA 17842

page of

StruCalc Version 10.0.1.6 3/17/2021 7:59:30 AM

DEFLECTIONS	Left		Center		Right	
Live Load	0.00	IN L/Infinity	0.00	IN L/Infinity	0.00	IN L/Infinity
Dead Load	0.01	in	0.01	in	0.00	in
Total Load	0.01	IN L/MAX	0.01	IN L/MAX	0.00	IN L/MAX

Live Load Deflection Criteria: L/360 Total Load Deflection Criteria: L/240

REACTIONS	A	B	C	D
Live Load	0 lb	0 lb	0 lb	0 lb
Dead Load	726 lb	2334 lb	1900 lb	470 lb
Total Load	726 lb	2334 lb	1900 lb	470 lb
Uplift (1.5 F.S)	0 **lb**	**-5546 lb**	**-3645 lb**	**-239 lb**
Bearing Length	0.83 in	0.83 in	0.83 in	0.83 in

BEAM DATA	Left	Center	Right
Span Length	11.75 ft	13.5 ft	11.42 ft
Unbraced Length-Top	0 ft	0 ft	0 ft
Unbraced Length-Bottom	11.75 ft	13.5 ft	11.42 ft

STEEL PROPERTIES
W8x31 - A992-50

Properties:

Yield Stress:	Fy =	50 ksi
Modulus of Elasticity:	E =	29000 ksi
Depth:	d =	8 in
Web Thickness:	tw =	0.29 in
Flange Width:	bf =	8 in
Flange Thickness:	tf =	0.44 in
Distance to Web Toe of Fillet:	k =	0.83 in
Moment of Inertia About X-X Axis:	Ix =	110 in4
Section Modulus About X-X Axis:	Sx =	27.5 in3
Plastic Section Modulus About X-X Axis:	Zx =	30.4 in3

Design Properties per AISC 14th Edition Steel Manual:

Flange Buckling Ratio:	FBR =	9.2
Allowable Flange Buckling Ratio:	AFBR =	9.15
Web Buckling Ratio:	WBR =	22.25
Allowable Web Buckling Ratio:	AWBR =	90.55
Controlling Unbraced Length:	Lb =	13.5 ft
Limiting Unbraced Length -		
for lateral-torsional buckling:	Lp =	7.14 ft
for Eqn. F2-2:	Lr =	24.78 ft
Nominal Flexural Strength w/ safety factor:	Mn =	65816 ft-lb
Controlling Equation:	F2-2	
Web height to thickness ratio:	h/tw =	22.25
Limiting height to thickness ratio for eqn. G2-2:	h/tw-limit =	53.95
Cv Factor:	Cv =	1
Controlling Equation:	G2-2	
Nominal Shear Strength w/ safety factor:	Vn =	45600 lb

Controlling Moment: -2724 ft-lb
Over left support of span 2 (Center Span)
Created by combining all dead loads and live loads on span(s) 1, 2, 3
Controlling Shear: -1189 lb
12.0 Ft from left support of span 1 (Left Span)
Created by combining all dead loads and live loads on span(s

Comparisons with required sections:	Req'd	Provided
Moment of Inertia (deflection):	1.76 in4	110 in4
Moment:	-2724 ft-lb	65816 ft-lb
Shear:	-1189 lb	45600 lb

NOTES

LOADING DIAGRAM

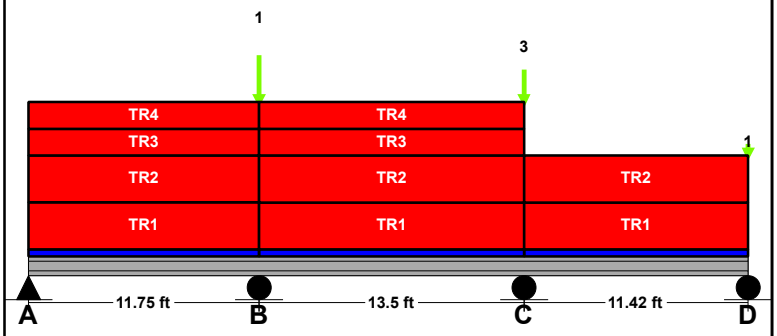

UNIFORM LOADS	Left	Center	Right
Uniform Live Load	0 plf	0 plf	0 plf
Uniform Dead Load	0 plf	0 plf	0 plf
Beam Self Weight	31 plf	31 plf	31 plf
Total Uniform Load	31 plf	31 plf	31 plf

POINT LOADS - CENTER SPAN

Load Number	One	Two	Three	Four
Live Load	-3551 lb	-3551 lb	-2456 lb	-2456 lb
Dead Load	0 lb	0 lb	0 lb	0 lb
Location	0 ft	0 ft	13.5 ft	13.5 ft

RIGHT SPAN

Load Number	One	Two
Live Load	-276 lb	-276 lb
Dead Load	0 lb	0 lb
Location	11.42 ft	11.42 ft

TRAPEZOIDAL LOADS - LEFT SPAN

Load Number	One	Two	Three	Four
Left Live Load	0 plf	0 plf	0 plf	0 plf
Left Dead Load	42 plf	42 plf	24 plf	24 plf
Right Live Load	0 plf	0 plf	0 plf	0 plf
Right Dead Load	42 plf	42 plf	24 plf	24 plf
Load Start	0 ft	0 ft	0 ft	0 ft
Load End	11.75 ft	11.75 ft	11.75 ft	11.75 ft
Load Length	11.75 ft	11.75 ft	11.75 ft	11.75 ft

CENTER SPAN

Load Number	One	Two	Three	Four
Left Live Load	0 plf	0 plf	0 plf	0 plf
Left Dead Load	42 plf	42 plf	24 plf	24 plf
Right Live Load	0 plf	0 plf	0 plf	0 plf
Right Dead Load	42 plf	42 plf	24 plf	24 plf
Load Start	0 ft	0 ft	0 ft	0 ft
Load End	13.5 ft	13.5 ft	13.5 ft	13.5 ft
Load Length	13.5 ft	13.5 ft	13.5 ft	13.5 ft

RIGHT SPAN

Load Number	One	Two
Left Live Load	0 plf	0 plf
Left Dead Load	42 plf	42 plf
Right Live Load	0 plf	0 plf
Right Dead Load	42 plf	42 plf
Load Start	0 ft	0 ft
Load End	11.42 ft	11.42 ft
Load Length	11.42 ft	11.42 ft

PFS APPROVED
DATE 3/23/21
PFS CORPORATION
Bloomsburg, PA

Project: CC-729 Structural Calcs 03-15-2021 DAK

Location: Ceiling beam CB1-1 - Snow
Multi-Loaded Multi-Span Beam
[2015 International Building Code(2015 NDS)]
(4) 1.75 IN x 11.25 IN x 13.71 FT
2.1E-3100F - APA EWS LVL Stress Classes
Section Adequate By: 56.4%
Controlling Factor: Moment

StruCalc 9.0

Glenco, Inc.
217 East Main Street
Middleburg, PA 17842

StruCalc Version 10.0.1.6 3/17/2021 7:59:30 AM

CAUTIONS

* Laminations are to be fully connected to provide uniform transfer of loads to all members

DEFLECTIONS Center

Live Load	0.28	IN L/591
Dead Load	0.11	in
Total Load	0.38	IN L/428

Live Load Deflection Criteria: L/360 Total Load Deflection Criteria: L/240

REACTIONS A B

	A		B	
Live Load	2328	lb	5800	lb
Dead Load	993	lb	2155	lb
Total Load	3321	lb	7955	lb
Bearing Length	0.56	in	1.34	in

BEAM DATA Center

Span Length	13.71	ft
Unbraced Length-Top	0	ft
Unbraced Length-Bottom	0	ft
Live Load Duration Factor	1.00	
Notch Depth	0.00	

MATERIAL PROPERTIES

2.1E-3100F - APA EWS LVL Stress Classes

	Base Values		Adjusted	
Bending Stress:	Fb = 3100	psi	Fb' = 3125	psi
	Cd=1.00 CF=1.01			
Shear Stress:	Fv = 285	psi	Fv' = 285	psi
	Cd=1.00			
Modulus of Elasticity:	E = 2100	ksi	E' = 2100	ksi
Comp. ⊥ to Grain:	Fc - ⊥ = 850	psi	Fc - ⊥' = 850	psi

Controlling Moment: 24585 ft-lb
10.42 Ft from left support of span 2 (Center Span)
Created by combining all dead loads and live loads on span(s) 2

Controlling Shear: -7854 lb
At a distance d from right support of span 2 (Center Span)
Created by combining all dead loads and live loads on span(s) 2

Comparisons with required sections:	Req'd		Provided	
Section Modulus:	94.4	in3	147.66	in3
Area (Shear):	41.34	in2	78.75	in2
Moment of Inertia (deflection):	506.2	in4	830.57	in4
Moment:	24585	ft-lb	38454	ft-lb
Shear:	-7854	lb	14963	lb

LOADING DIAGRAM

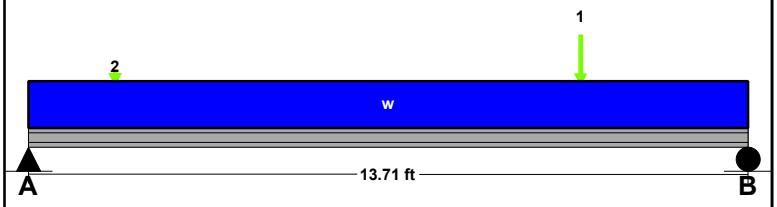

UNIFORM LOADS Center

Uniform Live Load	80	plf
Uniform Dead Load	20	plf
Beam Self Weight	23	plf
Total Uniform Load	123	plf

POINT LOADS - CENTER SPAN

Load Number	One *		Two *	
Live Load	6809	lb	222	lb
Dead Load	2400	lb	159	lb
Location	10.52	ft	1.65	ft

* Load obtained from Load Tracker. See Summary Report for details.

NOTES

PFS APPROVED
DATE 3/23/21
PFS CORPORATION
Bloomsburg, PA

Project: CC-729 Structural Calcs 03-15-2021 DAK

Location: Ceiling beam CB1-1 - Uplift
Multi-Loaded Multi-Span Beam
[2015 International Building Code(2015 NDS)]
(4) 1.75 IN x 11.25 IN x 13.71 FT
2.1E-3100F - APA EWS LVL Stress Classes
Section Adequate By: 238.5%
Controlling Factor: Deflection

StruCalc 9.0

Glenco, Inc.
217 East Main Street
Middleburg, PA 17842

StruCalc Version 10.0.1.6

3/17/2021 7:59:31 AM

CAUTIONS

* Laminations are to be fully connected to provide uniform transfer of loads to all members

DEFLECTIONS

	Center	
Live Load	-0.14	IN L/1219
Dead Load	0.01	in
Total Load	-0.12	IN L/1320

Live Load Deflection Criteria: L/360 Total Load Deflection Criteria: L/240

REACTIONS

	A		B	
Live Load	-1986	lb	-2561	lb
Dead Load	157	lb	157	lb
Total Load	-1829	lb	-2404	lb
Uplift (1.5 F.S)	**-1881**	**lb**	**-2456**	**lb**
Bearing Length	0.03	in	0.03	in

BEAM DATA

	Center	
Span Length	13.71	ft
Unbraced Length-Top	0	ft
Unbraced Length-Bottom	0	ft
Live Load Duration Factor	1.60	
Notch Depth	0.00	

MATERIAL PROPERTIES

2.1E-3100F - APA EWS LVL Stress Classes

	Base Values		Adjusted	
Bending Stress:	Fb = 3100	psi	Fb' = 5000	psi
	Cd=1.60 CF=1.01			
Shear Stress:	Fv = 285	psi	Fv' = 456	psi
	Cd=1.60			
Modulus of Elasticity:	E = 2100	ksi	E' = 2100	ksi
Comp. ⊥ to Grain:	Fc - ⊥ = 850	psi	Fc - ⊥' = 850	psi

Controlling Moment: -7721 ft-lb
10.42 Ft from left support of span 2 (Center Span)
Created by combining all dead loads and live loads on span(s) 2

Controlling Shear: 2476 lb
11.0 Ft from left support of span 2 (Center Span)
Created by combining all dead loads and live loads on span(s) 2

Comparisons with required sections:	Req'd	Provided
Section Modulus:	18.53 in3	147.66 in3
Area (Shear):	8.15 in2	78.75 in2
Moment of Inertia (deflection):	245.38 in4	830.57 in4
Moment:	-7721 ft-lb	61526 ft-lb
Shear:	2476 lb	23940 lb

LOADING DIAGRAM

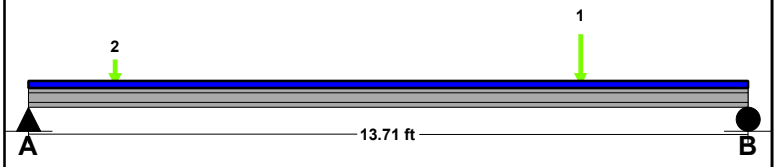

UNIFORM LOADS

	Center	
Uniform Live Load	0	plf
Uniform Dead Load	0	plf
Beam Self Weight	23	plf
Total Uniform Load	23	plf

POINT LOADS - CENTER SPAN

Load Number	One		Two	
Live Load	-3113	lb	-1434	lb
Dead Load	0	lb	0	lb
Location	10.52	ft	1.65	ft

NOTES

PFS APPROVED
DATE 3/23/21
PFS CORPORATION
Bloomsburg, PA

Project: CC-729 Structural Calcs 03-15-2021 DAK

Location: Ceiling beam CB1-2 - Snow
Multi-Loaded Multi-Span Beam
[2015 International Building Code(2015 NDS)]
(4) 1.75 IN x 11.25 IN x 13.71 FT
2.1E-3100F - APA EWS LVL Stress Classes
Section Adequate By: 19.9%
Controlling Factor: Moment

StruCalc 9.0

Glenco, Inc.
217 East Main Street
Middleburg, PA 17842

StruCalc Version 10.0.1.6 3/17/2021 7:59:31 AM

CAUTIONS

* Laminations are to be fully connected to provide uniform transfer of loads to all members

DEFLECTIONS Center

Live Load	0.36	IN L/463
Dead Load	0.13	in
Total Load	0.49	IN L/337

Live Load Deflection Criteria: L/360 Total Load Deflection Criteria: L/240

REACTIONS A B

	A		B	
Live Load	2668	lb	7537	lb
Dead Load	1051	lb	2788	lb
Total Load	3719	lb	10325	lb
Bearing Length	0.62	in	1.74	in

BEAM DATA Center

Span Length	13.71	ft
Unbraced Length-Top	0	ft
Unbraced Length-Bottom	0	ft
Live Load Duration Factor	1.00	
Notch Depth	0.00	

MATERIAL PROPERTIES

2.1E-3100F - APA EWS LVL Stress Classes

	Base Values		Adjusted	
Bending Stress:	Fb = 3100	psi	Fb' = 3125	psi
	Cd=1.00 CF=1.01			
Shear Stress:	Fv = 285	psi	Fv' = 285	psi
	Cd=1.00			
Modulus of Elasticity:	E = 2100	ksi	E' = 2100	ksi
Comp. ⊥ to Grain:	Fc - ⊥ = 850	psi	Fc - ⊥' = 850	psi

Controlling Moment: 32069 ft-lb
10.42 Ft from left support of span 2 (Center Span)
Created by combining all dead loads and live loads on span(s) 2

Controlling Shear: -10224 lb
At a distance d from right support of span 2 (Center Span)
Created by combining all dead loads and live loads on span(s) 2

Comparisons with required sections:	Req'd		Provided	
Section Modulus:	123.14	in3	147.66	in3
Area (Shear):	53.81	in2	78.75	in2
Moment of Inertia (deflection):	645.28	in4	830.57	in4
Moment:	32069	ft-lb	38454	ft-lb
Shear:	-10224	lb	14963	lb

LOADING DIAGRAM

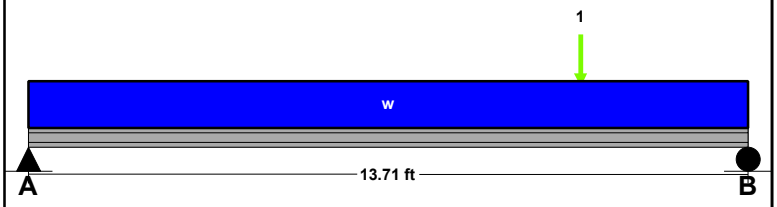

UNIFORM LOADS Center

Uniform Live Load	80	plf
Uniform Dead Load	20	plf
Beam Self Weight	23	plf
Total Uniform Load	123	plf

POINT LOADS - CENTER SPAN

Load Number	One *	
Live Load	9108	lb
Dead Load	3250	lb
Location	10.52	ft

* Load obtained from Load Tracker. See Summary Report for details.

NOTES

PFS APPROVED
DATE 3/23/21
PFS CORPORATION
Bloomsburg, PA

Project: CC-729 Structural Calcs 03-15-2021 DAK

Location: Ceiling beam CB1-2 - Uplift
Multi-Loaded Multi-Span Beam
[2015 International Building Code(2015 NDS)]
(4) 1.75 IN x 11.25 IN x 13.71 FT
2.1E-3100F - APA EWS LVL Stress Classes
Section Adequate By: 173.7%
Controlling Factor: Deflection

StruCalc 9.0

Glenco, Inc.
217 East Main Street
Middleburg, PA 17842

StruCalc Version 10.0.1.6 3/17/2021 7:59:31 AM

CAUTIONS

* Laminations are to be fully connected to provide uniform transfer of loads to all members

DEFLECTIONS Center

Live Load	-0.17	IN L/985
Dead Load	0.01	in
Total Load	-0.16	IN L/1050

Live Load Deflection Criteria: L/360 Total Load Deflection Criteria: L/240

REACTIONS A B

	A		B	
Live Load	-1108	lb	-3656	lb
Dead Load	157	lb	157	lb
Total Load	-951	lb	-3499	lb
Uplift (1.5 F.S)	**-1004**	**lb**	**-3551**	**lb**
Bearing Length	0.03	in	0.03	in

BEAM DATA Center

Span Length	13.71	ft
Unbraced Length-Top	0	ft
Unbraced Length-Bottom	0	ft
Live Load Duration Factor	1.60	
Notch Depth	0.00	

MATERIAL PROPERTIES

2.1E-3100F - APA EWS LVL Stress Classes

	Base Values		Adjusted	
Bending Stress:	Fb = 3100	psi	Fb' = 5000	psi
	Cd=1.60 CF=1.01			
Shear Stress:	Fv = 285	psi	Fv' = 456	psi
	Cd=1.60			
Modulus of Elasticity:	E = 2100	ksi	E' = 2100	ksi
Comp. ⊥ to Grain:	Fc - ⊥ = 850	psi	Fc - ⊥' = 850	psi

Controlling Moment: -11156 ft-lb
10.42 Ft from left support of span 2 (Center Span)
Created by combining all dead loads and live loads on span(s) 2

Controlling Shear: 3571 lb
11.0 Ft from left support of span 2 (Center Span)
Created by combining all dead loads and live loads on span(s) 2

Comparisons with required sections:	Req'd	Provided
Section Modulus:	26.77 in3	147.66 in3
Area (Shear):	11.75 in2	78.75 in2
Moment of Inertia (deflection):	303.46 in4	830.57 in4
Moment:	-11156 ft-lb	61526 ft-lb
Shear:	3571 lb	23940 lb

LOADING DIAGRAM

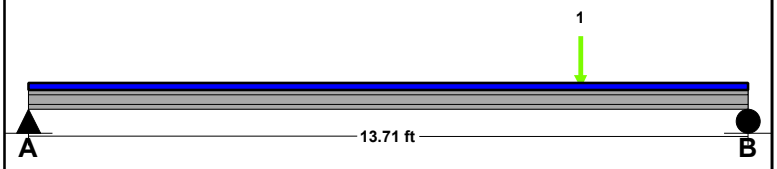

UNIFORM LOADS Center

Uniform Live Load	0	plf
Uniform Dead Load	0	plf
Beam Self Weight	23	plf
Total Uniform Load	23	plf

POINT LOADS - CENTER SPAN

Load Number	One	
Live Load	-4764	lb
Dead Load	0	lb
Location	10.52	ft

NOTES

PFS APPROVED
DATE 3/23/21
PFS CORPORATION
Bloomsburg, PA

Project: CC-729 Structural Calcs 03-15-2021 DAK

Location: Deck floor girder
Multi-Loaded Multi-Span Beam
[2015 International Building Code(2015 NDS)]
(2) 1.5 IN x 9.25 IN x 5.11 FT
#2 - Southern Pine - Wet Use
Section Adequate By: 92.2%
Controlling Factor: Moment

StruCalc 9.0

Glenco, Inc.
217 East Main Street
Middleburg, PA 17842

StruCalc Version 10.0.1.6 3/17/2021 7:59:31 AM

CAUTIONS

* Laminations are to be fully connected to provide uniform transfer of loads to all members

DEFLECTIONS Center

Live Load	0.02	IN L/2549
Dead Load	0.00	in
Total Load	0.03	IN L/2192

Live Load Deflection Criteria: L/360 Total Load Deflection Criteria: L/240

REACTIONS A B

	A		B	
Live Load	999	lb	999	lb
Dead Load	163	lb	163	lb
Total Load	1162	lb	1162	lb
Bearing Length	1.02	in	1.02	in

BEAM DATA Center

Span Length	5.11	ft
Unbraced Length-Top	0	ft
Unbraced Length-Bottom	5.11	ft
Live Load Duration Factor	1.00	
Notch Depth	0.00	

LOADING DIAGRAM

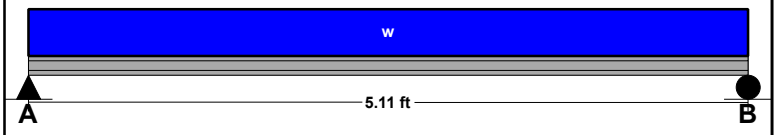

UNIFORM LOADS Center

Uniform Live Load	391	plf
Uniform Dead Load	57	plf
Beam Self Weight	7	plf
Total Uniform Load	455	plf

MATERIAL PROPERTIES

#2 - Southern Pine

	Base Values		Adjusted	
Bending Stress:	Fb = 800	psi	Fb' = 800	psi
	Cd=1.00 CF=1.00			
Shear Stress:	Fv = 175	psi	Fv' = 170	psi
	Cd=1.00 Cm=0.97			
Modulus of Elasticity:	E = 1400	ksi	E' = 1260	ksi
	Cm=0.90			
Comp. ⊥ to Grain:	Fc - ⊥ = 565	psi	Fc - ⊥' = 379	psi
	Cm=0.67			

Controlling Moment: 1484 ft-lb
2.56 Ft from left support of span 2 (Center Span)
Created by combining all dead loads and live loads on span(s) 2

Controlling Shear: 813 lb
At a distance d from left support of span 2 (Center Span)
Created by combining all dead loads and live loads on span(s) 2

Comparisons with required sections:	Req'd	Provided
Section Modulus:	22.26 in3	42.78 in3
Area (Shear):	7.18 in2	27.75 in2
Moment of Inertia (deflection):	27.94 in4	197.86 in4
Moment:	1484 ft-lb	2852 ft-lb
Shear:	813 lb	3140 lb

NOTES

PFS APPROVED
DATE 3/23/21
PFS CORPORATION
Bloomsburg, PA

Project: CC-729 Structural Calcs 03-15-2021 DAK

Location: Deck floor girder - Uplift
Multi-Loaded Multi-Span Beam
[2015 International Building Code(2015 NDS)]
(2) 1.5 IN x 9.25 IN x 5.11 FT
#2 - Southern Pine - Wet Use
Section Adequate By: 1845.6%
Controlling Factor: Moment

StruCalc 9.0

Glenco, Inc.
217 East Main Street
Middleburg, PA 17842

StruCalc Version 10.0.1.6

3/17/2021 7:59:31 AM

CAUTIONS

* Laminations are to be fully connected to provide uniform transfer of loads to all members

DEFLECTIONS	Center	
Live Load	0.00	IN L/MAX
Dead Load	0.00	in
Total Load	0.00	IN L/MAX

Live Load Deflection Criteria: L/360 Total Load Deflection Criteria: L/240

REACTIONS	A		B	
Live Load	-197	lb	-197	lb
Dead Load	17	lb	17	lb
Total Load	-180	lb	-180	lb
Uplift (1.5 F.S)	**-185**	**lb**	**-185**	**lb**
Bearing Length	0.01	in	0.01	in

BEAM DATA	Center	
Span Length	5.11	ft
Unbraced Length-Top	0	ft
Unbraced Length-Bottom	5.11	ft
Live Load Duration Factor	1.60	
Notch Depth	0.00	

LOADING DIAGRAM

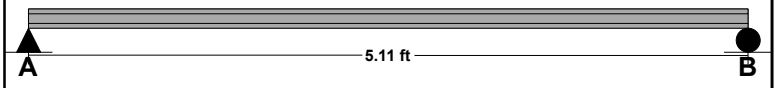

UNIFORM LOADS	Center	
Uniform Live Load	-77	plf
Uniform Dead Load	0	plf
Beam Self Weight	7	plf
Total Uniform Load	-70	plf

MATERIAL PROPERTIES

#2 - Southern Pine

	Base Values		Adjusted	
Bending Stress:	Fb = 800	psi	Fb' = 1254	psi
	Cd=1.60 Cl=0.98 CF=1.00			
Shear Stress:	Fv = 175	psi	Fv' = 272	psi
	Cd=1.60 Cm=0.97			
Modulus of Elasticity:	E = 1400	ksi	E' = 1260	ksi
	Cm=0.90			
Comp. ⊥ to Grain:	Fc - ⊥ = 565	psi	Fc - ⊥' = 379	psi
	Cm=0.67			

Controlling Moment: -230 ft-lb
2.56 Ft from left support of span 2 (Center Span)
Created by combining all dead loads and live loads on span(s) 2

Controlling Shear: -180 lb
At left support of span 2 (Center Span)
Created by combining all dead loads and live loads on span(s) 2

Comparisons with required sections:	Req'd	Provided
Section Modulus:	2.2 in3	42.78 in3
Area (Shear):	0.99 in2	27.75 in2
Moment of Inertia (deflection):	5.5 in4	197.86 in4
Moment:	-230 ft-lb	4470 ft-lb
Shear:	-180 lb	5025 lb

NOTES

PFS **APPROVED**
DATE 3/23/21
PFS CORPORATION
Bloomsburg, PA

Project: CC-729 Structural Calcs 03-15-2021 DAK

Location: Deck joist - Snow Drift
Multi-Loaded Multi-Span Beam
[2015 International Building Code(2015 NDS)]
1.5 IN x 7.25 IN x 8.0 FT (7 + 1)
#2 - Southern Pine - Wet Use
Section Adequate By: 15.2%
Controlling Factor: Moment

StruCalc 9.0

Glenco, Inc.
217 East Main Street
Middleburg, PA 17842

page of

StruCalc Version 10.0.1.6 3/17/2021 7:59:32 AM

DEFLECTIONS

	Center		Right	
Live Load	0.11	IN L/732	-0.05	IN 2L/464
Dead Load	0.01	in	-0.01	in
Total Load	0.13	IN L/651	-0.06	IN 2L/414

Live Load Deflection Criteria: L/360 Total Load Deflection Criteria: L/240

REACTIONS

	A		B	
Live Load	476	lb	521	lb
Dead Load	57	lb	76	lb
Total Load	533	lb	597	lb
Bearing Length	0.94	in	1.05	in

BEAM DATA

	Center	Right
Span Length	7 ft	1 ft
Unbraced Length-Top	0 ft	0 ft
Unbraced Length-Bottom	7 ft	1 ft
Live Load Duration Factor	1.00	
Notch Depth	0.00	

MATERIAL PROPERTIES

#2 - Southern Pine

	Base Values		Adjusted	
Bending Stress:	Fb = 925 psi		Fb' = 925 psi	
	Cd=1.00 CF=1.00			
Shear Stress:	Fv = 175 psi		Fv' = 170 psi	
	Cd=1.00 Cm=0.97			
Modulus of Elasticity:	E = 1400 ksi		E' = 1260 ksi	
	Cm=0.90			
Comp. ⊥ to Grain:	Fc - ⊥ = 565 psi		Fc - ⊥' = 379 psi	
	Cm=0.67			

Controlling Moment: 879 ft-lb
3.36 Ft from left support of span 2 (Center Span)
Created by combining all dead loads and live loads on span(s) 2

Controlling Shear: 439 lb
At a distance d from left support of span 2 (Center Span)
Created by combining all dead loads and live loads on span(s) 2

Comparisons with required sections:	Req'd	Provided
Section Modulus:	11.41 in3	13.14 in3
Area (Shear):	3.88 in2	10.88 in2
Moment of Inertia (deflection):	36.98 in4	47.63 in4
Moment:	879 ft-lb	1013 ft-lb
Shear:	439 lb	1231 lb

LOADING DIAGRAM

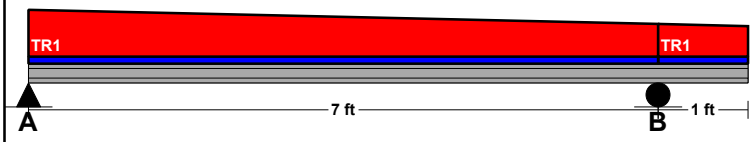

UNIFORM LOADS

	Center	Right
Uniform Live Load	0 plf	0 plf
Uniform Dead Load	0 plf	0 plf
Beam Self Weight	3 plf	3 plf
Total Uniform Load	3 plf	3 plf

TRAPEZOIDAL LOADS - CENTER SPAN

Load Number	One
Left Live Load	153 plf
Left Dead Load	14 plf
Right Live Load	102 plf
Right Dead Load	14 plf
Load Start	0 ft
Load End	7 ft
Load Length	7 ft

RIGHT SPAN

Load Number	One
Left Live Load	102 plf
Left Dead Load	14 plf
Right Live Load	94 plf
Right Dead Load	14 plf
Load Start	0 ft
Load End	1 ft
Load Length	1 ft

NOTES

PFS APPROVED
DATE 3/23/21
PFS CORPORATION
Bloomsburg, PA

Project: CC-729 Structural Calcs 03-15-2021 DAK

Location: Deck joist - Uplift
Multi-Loaded Multi-Span Beam
[2015 International Building Code(2015 NDS)]
1.5 IN x 7.25 IN x 8.0 FT (7 + 1)
#2 - Southern Pine - Wet Use
Section Adequate By: 575.1%
Controlling Factor: Deflection

StruCalc 9.0

Glenco, Inc.
217 East Main Street
Middleburg, PA 17842

page
of

StruCalc Version 10.0.1.6 3/17/2021 7:59:32 AM

DEFLECTIONS

	Center		Right	
Live Load	-0.02	IN L/3889	0.01	IN 2L/2430
Dead Load	0.00	in	0.00	in
Total Load	-0.02	IN L/4335	0.01	IN 2L/2696

Live Load Deflection Criteria: L/360 Total Load Deflection Criteria: L/240

REACTIONS

	A		B	
Live Load	2	lb	-26	lb
Dead Load	9	lb	12	lb
Total Load	11	lb	-14	lb
Uplift (1.5 F.S)	**-78**	**lb**	**-102**	**lb**
Bearing Length	0.02	in	0.02	in

BEAM DATA

	Center		Right	
Span Length	7	ft	1	ft
Unbraced Length-Top	0	ft	0	ft
Unbraced Length-Bottom	7	ft	1	ft
Live Load Duration Factor	1.60			
Notch Depth	0.00			

MATERIAL PROPERTIES

#2 - Southern Pine

	Base Values		Adjusted	
Bending Stress:	Fb = 925	psi	Fb' = 981	psi
	Cd=1.60 Cl=0.66 CF=1.00			
Shear Stress:	Fv = 175	psi	Fv' = 272	psi
	Cd=1.60 Cm=0.97			
Modulus of Elasticity:	E = 1400	ksi	E' = 1260	ksi
	Cm=0.90			
Comp. ⊥ to Grain:	Fc - ⊥ = 565	psi	Fc - ⊥' = 379	psi
	Cm=0.67			

Controlling Moment: -132 ft-lb
3.5 Ft from left support of span 2 (Center Span)
Created by combining all dead loads and live loads on span(s) 2

Controlling Shear: 76 lb
At right support of span 2 (Center Span)
Created by combining all dead loads and live loads on span(s) 2, 3

Comparisons with required sections:	Req'd	Provided
Section Modulus:	1.61 in3	13.14 in3
Area (Shear):	0.42 in2	10.88 in2
Moment of Inertia (deflection):	7.06 in4	47.63 in4
Moment:	-132 ft-lb	1074 ft-lb
Shear:	76 lb	1969 lb

LOADING DIAGRAM

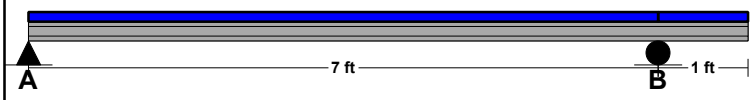

UNIFORM LOADS

	Center		Right	
Uniform Live Load	-24	plf	-24	plf
Uniform Dead Load	0	plf	0	plf
Beam Self Weight	3	plf	3	plf
Total Uniform Load	-21	plf	-21	plf

NOTES

PFS APPROVED
DATE 3/23/21
PFS CORPORATION
Bloomsburg, PA

Project: CC-729 Structural Calcs 03-15-2021 DAK

Location: Header - Ext wall up to 5/6 opg
Multi-Loaded Multi-Span Beam
[2015 International Building Code(2015 NDS)]
(3) 1.5 IN x 5.5 IN x 5.75 FT
#2 - Spruce-Pine-Fir - Dry Use
Section Adequate By: 31.7%
Controlling Factor: Moment

StruCalc 9.0

Glenco, Inc.
217 East Main Street
Middleburg, PA 17842

StruCalc Version 10.0.1.6 3/17/2021 7:59:32 AM

DEFLECTIONS Center

Live Load	0.11	IN L/630
Dead Load	0.04	in
Total Load	0.15	IN L/469

Live Load Deflection Criteria: L/360 Total Load Deflection Criteria: L/240

REACTIONS

	A		B	
Live Load	1118	lb	1118	lb
Dead Load	384	lb	384	lb
Total Load	1502	lb	1502	lb
Bearing Length	0.79	in	0.79	in

BEAM DATA Center

Span Length	5.75	ft
Unbraced Length-Top	0	ft
Unbraced Length-Bottom	5.75	ft
Live Load Duration Factor	1.15	
Notch Depth	0.00	

MATERIAL PROPERTIES

#2 - Spruce-Pine-Fir

	Base Values		Adjusted	
Bending Stress:	Fb = 875	psi	Fb' = 1504	psi
	Cd=1.15 CF=1.30 Cr=1.15			
Shear Stress:	Fv = 135	psi	Fv' = 155	psi
	Cd=1.15			
Modulus of Elasticity:	E = 1400	ksi	E' = 1400	ksi
Comp. ⊥ to Grain:	Fc - ⊥ = 425	psi	Fc - ⊥' = 425	psi

Controlling Moment: 2159 ft-lb
2.88 Ft from left support of span 2 (Center Span)
Created by combining all dead loads and live loads on span(s) 2

Controlling Shear: -1292 lb
At a distance d from right support of span 2 (Center Span)
Created by combining all dead loads and live loads on span(s) 2

Comparisons with required sections:	Req'd		Provided	
Section Modulus:	17.23	in3	22.69	in3
Area (Shear):	12.48	in2	24.75	in2
Moment of Inertia (deflection):	35.65	in4	62.39	in4
Moment:	2159	ft-lb	2844	ft-lb
Shear:	-1292	lb	2562	lb

LOADING DIAGRAM

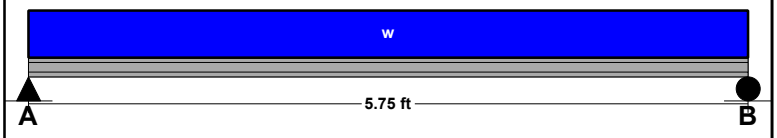

UNIFORM LOADS Center

Uniform Live Load	389	plf
Uniform Dead Load	129	plf
Beam Self Weight	5	plf
Total Uniform Load	523	plf

NOTES

PFS APPROVED
DATE 3/23/21
PFS CORPORATION
Bloomsburg, PA

Project: CC-729 Structural Calcs 03-15-2021 DAK

Location: Header - Mate wall up to 5/0 opg
Multi-Loaded Multi-Span Beam
[2015 International Building Code(2015 NDS)]
(2) 1.5 IN x 5.5 IN x 5.25 FT
#2 - Spruce-Pine-Fir - Dry Use
Section Adequate By: 12.1%
Controlling Factor: Moment

StruCalc 9.0
Glenco, Inc.
217 East Main Street
Middleburg, PA 17842

StruCalc Version 10.0.1.6 3/17/2021 7:59:32 AM

DEFLECTIONS

	Center	
Live Load	0.09	IN L/675
Dead Load	0.03	in
Total Load	0.13	IN L/503

Live Load Deflection Criteria: L/360 Total Load Deflection Criteria: L/240

REACTIONS

	A		B	
Live Load	835	lb	835	lb
Dead Load	286	lb	286	lb
Total Load	1121	lb	1121	lb
Bearing Length	0.88	in	0.88	in

BEAM DATA

	Center	
Span Length	5.25	ft
Unbraced Length-Top	0	ft
Unbraced Length-Bottom	5.25	ft
Live Load Duration Factor	1.15	
Notch Depth	0.00	

MATERIAL PROPERTIES

#2 - Spruce-Pine-Fir

	Base Values		Adjusted	
Bending Stress:	Fb = 875	psi	Fb' = 1308	psi
	Cd=1.15 CF=1.30			
Shear Stress:	Fv = 135	psi	Fv' = 155	psi
	Cd=1.15			
Modulus of Elasticity:	E = 1400	ksi	E' = 1400	ksi
Comp. ⊥ to Grain:	Fc - ⊥ = 425	psi	Fc - ⊥' = 425	psi

Controlling Moment: 1471 ft-lb
2.62 Ft from left support of span 2 (Center Span)
Created by combining all dead loads and live loads on span(s) 2

Controlling Shear: 942 lb
At a distance d from left support of span 2 (Center Span)
Created by combining all dead loads and live loads on span(s) 2

Comparisons with required sections:	Req'd		Provided	
Section Modulus:	13.5	in3	15.13	in3
Area (Shear):	9.1	in2	16.5	in2
Moment of Inertia (deflection):	22.18	in4	41.59	in4
Moment:	1471	ft-lb	1649	ft-lb
Shear:	942	lb	1708	lb

LOADING DIAGRAM

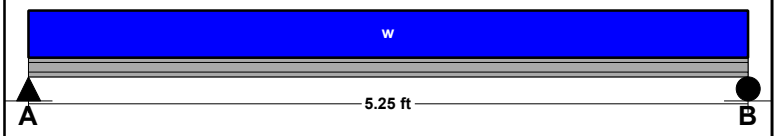

UNIFORM LOADS

	Center	
Uniform Live Load	318	plf
Uniform Dead Load	106	plf
Beam Self Weight	3	plf
Total Uniform Load	427	plf

NOTES

PFS APPROVED
DATE 3/23/21
PFS CORPORATION
Bloomsburg, PA

Project: CC-729 Structural Calcs 03-15-2021 DAK

Location: Header H1-1
Multi-Loaded Multi-Span Beam
[2015 International Building Code(2015 NDS)]
(3) 1.5 IN x 9.25 IN x 2.76 FT
#2 - Spruce-Pine-Fir - Dry Use
Section Adequate By: 60.4%
Controlling Factor: Shear

StruCalc 9.0
Glenco, Inc.
217 East Main Street
Middleburg, PA 17842

StruCalc Version 10.0.1.6 3/17/2021 7:59:32 AM

CAUTIONS
* Laminations are to be fully connected to provide uniform transfer of loads to all members

DEFLECTIONS	Center		
Live Load	0.00	IN	L/7732
Dead Load	0.00	in	
Total Load	0.01	IN	L/5459

Live Load Deflection Criteria: L/360 Total Load Deflection Criteria: L/240

REACTIONS	A		B	
Live Load	2178	lb	1102	lb
Dead Load	900	lb	456	lb
Total Load	3078	lb	1558	lb
Bearing Length	1.61	in	0.81	in

BEAM DATA	Center	
Span Length	2.76	ft
Unbraced Length-Top	0	ft
Unbraced Length-Bottom	2.76	ft
Live Load Duration Factor	1.15	
Notch Depth	0.00	

MATERIAL PROPERTIES
#2 - Spruce-Pine-Fir

	Base Values			Adjusted	
Bending Stress:	Fb =	875	psi	Fb' =	1273 psi
	Cd=1.15 CF=1.10 Cr=1.15				
Shear Stress:	Fv =	135	psi	Fv' =	155 psi
	Cd=1.15				
Modulus of Elasticity:	E =	1400	ksi	E' =	1400 ksi
Comp. ⊥ to Grain:	Fc - ⊥ =	425	psi	Fc - ⊥' =	425 psi

Controlling Moment: 2212 ft-lb
0.77 Ft from left support of span 2 (Center Span)
Created by combining all dead loads and live loads on span(s) 2
Controlling Shear: 2686 lb
At a distance d from left support of span 2 (Center Span)
Created by combining all dead loads and live loads on span(s) 2

Comparisons with required sections:	Req'd	Provided
Section Modulus:	20.86 in3	64.17 in3
Area (Shear):	25.95 in2	41.63 in2
Moment of Inertia (deflection):	13.82 in4	296.79 in4
Moment:	2212 ft-lb	6807 ft-lb
Shear:	2686 lb	4308 lb

LOADING DIAGRAM

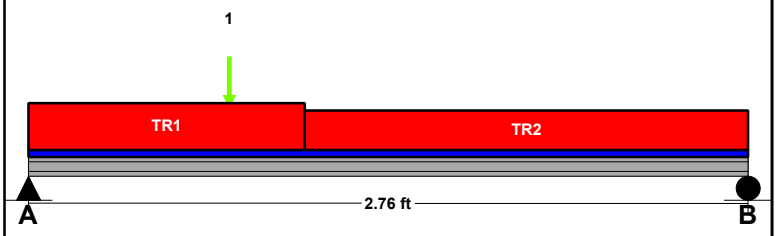

UNIFORM LOADS	Center	
Uniform Live Load	0	plf
Uniform Dead Load	0	plf
Beam Self Weight	8	plf
Total Uniform Load	8	plf

POINT LOADS - CENTER SPAN

Load Number	One *	
Live Load	2328	lb
Dead Load	993	lb
Location	0.77	ft

* Load obtained from Load Tracker. See Summary Report for details.

TRAPEZOIDAL LOADS - CENTER SPAN

Load Number	One		Two	
Left Live Load	389	plf	317	plf
Left Dead Load	129	plf	121	plf
Right Live Load	389	plf	317	plf
Right Dead Load	129	plf	121	plf
Load Start	0	ft	1.06	ft
Load End	1.06	ft	2.76	ft
Load Length	1.06	ft	1.7	ft

NOTES

PFS APPROVED
DATE 3/23/21
PFS CORPORATION
Bloomsburg, PA

Project: CC-729 Structural Calcs 03-15-2021 DAK

Location: Header H1-1 - Uplift
Multi-Loaded Multi-Span Beam
[2015 International Building Code(2015 NDS)]
(3) 1.5 IN x 9.25 IN x 2.76 FT
#2 - Spruce-Pine-Fir - Dry Use
Section Adequate By: 343.5%
Controlling Factor: Shear

StruCalc 9.0

Glenco, Inc.
217 East Main Street
Middleburg, PA 17842

StruCalc Version 10.0.1.6 3/17/2021 7:59:33 AM

CAUTIONS

* Laminations are to be fully connected to provide uniform transfer of loads to all members

DEFLECTIONS	Center	
Live Load	0.00	IN L/MAX
Dead Load	0.00	in
Total Load	0.00	IN L/MAX

Live Load Deflection Criteria: L/360 Total Load Deflection Criteria: L/240

REACTIONS	A		B	
Live Load	-1356	lb	-525	lb
Dead Load	10	lb	10	lb
Total Load	-1346	lb	-515	lb
Uplift (1.5 F.S)	**-1349**	**lb**	**-518**	**lb**
Bearing Length	0.01	in	0.01	in

BEAM DATA	Center	
Span Length	2.76	ft
Unbraced Length-Top	0	ft
Unbraced Length-Bottom	2.76	ft
Live Load Duration Factor	1.60	
Notch Depth	0.00	

MATERIAL PROPERTIES

#2 - Spruce-Pine-Fir

	Base Values		Adjusted	
Bending Stress:	Fb = 875	psi	Fb' = 1762	psi
	Cd=1.60 Cl=1.00 CF=1.10 Cr=1.15			
Shear Stress:	Fv = 135	psi	Fv' = 216	psi
	Cd=1.60			
Modulus of Elasticity:	E = 1400	ksi	E' = 1400	ksi
Comp. ⊥ to Grain:	Fc - ⊥ = 425	psi	Fc - ⊥' = 425	psi

Controlling Moment: -1037 ft-lb
0.77 Ft from left support of span 2 (Center Span)
Created by combining all dead loads and live loads on span(s) 2

Controlling Shear: -1351 lb
1.0 Ft from left support of span 2 (Center Span)
Created by combining all dead loads and live loads on span(s) 2

Comparisons with required sections:	Req'd		Provided	
Section Modulus:	7.06	in3	64.17	in3
Area (Shear):	9.38	in2	41.63	in2
Moment of Inertia (deflection):	8.41	in4	296.79	in4
Moment:	-1037	ft-lb	9424	ft-lb
Shear:	-1351	lb	5994	lb

LOADING DIAGRAM

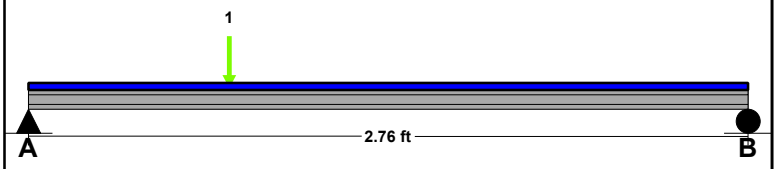

UNIFORM LOADS	Center	
Uniform Live Load	0	plf
Uniform Dead Load	0	plf
Beam Self Weight	8	plf
Total Uniform Load	8	plf

POINT LOADS - CENTER SPAN

Load Number	One	
Live Load	-1881	lb
Dead Load	0	lb
Location	0.77	ft

NOTES

PFS APPROVED
DATE 3/23/21
PFS CORPORATION
Bloomsburg, PA

Project: CC-729 Structural Calcs 03-15-2021 DAK

Location: Header H1-2
Multi-Loaded Multi-Span Beam
[2015 International Building Code(2015 NDS)]
(3) 1.75 IN x 5.5 IN x 7.69 FT
2.1E-3100F - APA EWS LVL Stress Classes
Section Adequate By: 57.1%
Controlling Factor: Deflection

StruCalc 9.0

Glenco, Inc.
217 East Main Street
Middleburg, PA 17842

StruCalc Version 10.0.1.6 3/17/2021 7:59:33 AM

DEFLECTIONS

	Center	
Live Load	0.16	IN L/566
Dead Load	0.07	in
Total Load	0.23	IN L/402

Live Load Deflection Criteria: L/360 Total Load Deflection Criteria: L/240

REACTIONS

	A		B	
Live Load	1219	lb	1219	lb
Dead Load	498	lb	498	lb
Total Load	1717	lb	1717	lb
Bearing Length	0.38	in	0.38	in

BEAM DATA

	Center	
Span Length	7.69	ft
Unbraced Length-Top	0	ft
Unbraced Length-Bottom	7.69	ft
Live Load Duration Factor	1.15	
Notch Depth	0.00	

LOADING DIAGRAM

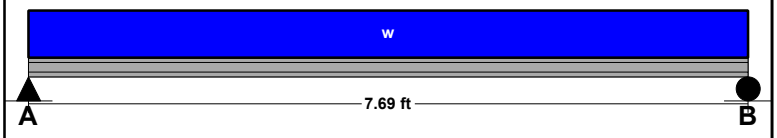

UNIFORM LOADS

	Center	
Uniform Live Load	317	plf
Uniform Dead Load	121	plf
Beam Self Weight	8	plf
Total Uniform Load	446	plf

MATERIAL PROPERTIES

2.1E-3100F - APA EWS LVL Stress Classes

	Base Values		Adjusted	
Bending Stress:	Fb = 3100	psi	Fb' = 3930	psi
	Cd=1.15 CF=1.10			
Shear Stress:	Fv = 285	psi	Fv' = 328	psi
	Cd=1.15			
Modulus of Elasticity:	E = 2100	ksi	E' = 2100	ksi
Comp. ⊥ to Grain:	Fc - ⊥ = 850	psi	Fc - ⊥' = 850	psi

Controlling Moment: 3300 ft-lb
3.85 Ft from left support of span 2 (Center Span)
Created by combining all dead loads and live loads on span(s) 2

Controlling Shear: 1545 lb
At a distance d from left support of span 2 (Center Span)
Created by combining all dead loads and live loads on span(s) 2

Comparisons with required sections:	Req'd		Provided	
Section Modulus:	10.08	in3	26.47	in3
Area (Shear):	7.07	in2	28.88	in2
Moment of Inertia (deflection):	46.33	in4	72.79	in4
Moment:	3300	ft-lb	8669	ft-lb
Shear:	1545	lb	6309	lb

NOTES

PFS APPROVED
DATE 3/23/21
PFS CORPORATION
Bloomsburg, PA

Project: CC-729 Structural Calcs 03-15-2021 DAK

Location: Prow Roof - Faceboard
Multi-Loaded Multi-Span Beam
[2015 International Building Code(2015 NDS)]
(2) 1.75 IN x 7.25 IN x 14.98 FT (1 + 10.5 + 3.5) (Actual 19.4 FT)
2.1E-3100F - APA EWS LVL Stress Classes
Section Adequate By: 91.0%
Controlling Factor: Deflection

StruCalc 9.0
Glenco, Inc.
217 East Main Street
Middleburg, PA 17842

StruCalc Version 10.0.1.6 3/17/2021 7:59:33 AM

CAUTIONS
* Laminations are to be fully connected to provide uniform transfer of loads to all members

DEFLECTIONS	Left		Center		Right	
Live Load	-0.07	IN 2L/458	0.18	IN L/887	-0.01	IN L/3713
Dead Load	-0.02	in	0.05	in	0.00	in
Total Load	-0.08	IN 2L/366	0.23	IN L/703	-0.02	IN L/2974

Live Load Deflection Criteria: L/240 Total Load Deflection Criteria: L/180

REACTIONS	A	B	C
Live Load	885 lb	1252 lb	57 lb
Dead Load	229 lb	371 lb	-93 lb
Total Load	1114 lb	1623 lb	-36 lb
Uplift (1.5 F.S)	**0 lb**	**0 lb**	**-528 lb**
Bearing Length	0.37 in	0.55 in	0.00 in

BEAM DATA	Left	Center	Right
Span Length	1 ft	10.5 ft	3.48 ft
Unbraced Length-Top	0 ft	0 ft	0 ft
Unbraced Length-Bottom	1 ft	10.5 ft	3.48 ft
Beam End Elevation Difference		12.25 ft	
Live Load Duration Factor		1.15	
Notch Depth		0.00	

MATERIAL PROPERTIES
2.1E-3100F - APA EWS LVL Stress Classes

	Base Values		Adjusted	
Bending Stress:	Fb = 3100 psi		Fb' = 3797 psi	
	Cd=1.15 CF=1.07			
Shear Stress:	Fv = 285 psi		Fv' = 328 psi	
	Cd=1.15			
Modulus of Elasticity:	E = 2100 ksi		E' = 2100 ksi	
Comp. ⊥ to Grain:	Fc - ⊥ = 850 psi		Fc - ⊥' = 850 psi	

Controlling Moment: 2069 ft-lb
3.677 Ft from left support of span 2 (Center Span)
Created by combining all dead loads and live loads on span(s) 2
Controlling Shear: 809 lb
At a distance d from left support of span 2 (Center Span)
Created by combining all dead loads and live loads on span(s) 1, 2

Comparisons with required sections:	Req'd	Provided
Section Modulus:	6.54 in3	30.66 in3
Area (Shear):	3.7 in2	25.38 in2
Moment of Inertia (deflection):	58.18 in4	111.15 in4
Moment:	2069 ft-lb	9701 ft-lb
Shear:	809 lb	5544 lb

NOTES

PFS APPROVED
DATE 3/23/21
PFS CORPORATION
Bloomsburg, PA

LOADING DIAGRAM

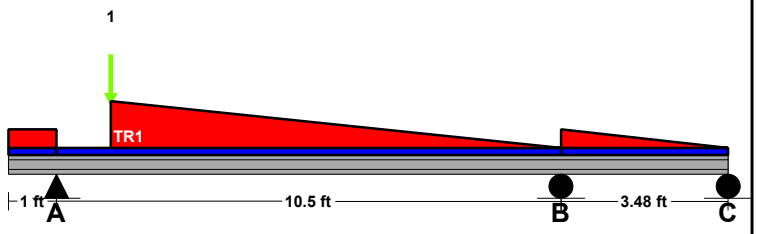

UNIFORM LOADS	Left	Center	Right
Uniform Live Load	0 plf	0 plf	0 plf
Uniform Dead Load	0 plf	0 plf	0 plf
Beam Self Weight	7 plf	7 plf	7 plf
Total Uniform Load	7 plf	7 plf	7 plf

POINT LOADS - CENTER SPAN

Load Number	One
Live Load	246 lb
Dead Load	37 lb
Location	1.13 ft

TRAPEZOIDAL LOADS - LEFT SPAN

Load Number	One
Left Live Load	45 plf
Left Dead Load	8 plf
Right Live Load	47 plf
Right Dead Load	8 plf
Load Start	0 ft
Load End	1 ft
Load Length	1 ft

CENTER SPAN

Load Number	One
Left Live Load	273 plf
Left Dead Load	46 plf
Right Live Load	0 plf
Right Dead Load	0 plf
Load Start	1.13 ft
Load End	10.5 ft
Load Length	9.37 ft

RIGHT SPAN

Load Number	One
Left Live Load	104 plf
Left Dead Load	17 plf
Right Live Load	0 plf
Right Dead Load	0 plf
Load Start	0 ft
Load End	3.48 ft
Load Length	3.48 ft

Project: CC-729 Structural Calcs 03-15-2021 DAK

Location: Prow Roof - Faceboard - Uplift
Multi-Loaded Multi-Span Beam
[2015 International Building Code(2015 NDS)]
(2) 1.75 IN x 7.25 IN x 14.98 FT (1 + 10.5 + 3.5) (Actual 19.4 FT)
2.1E-3100F - APA EWS LVL Stress Classes
Section Adequate By: 253.8%
Controlling Factor: Deflection

StruCalc 9.0

Glenco, Inc.
217 East Main Street
Middleburg, PA 17842

StruCalc Version 10.0.1.6 3/17/2021 7:59:33 AM

CAUTIONS

* Laminations are to be fully connected to provide uniform transfer of loads to all members

DEFLECTIONS	Left		Center		Right	
Live Load	0.04	IN 2L/850	-0.10	IN L/1637	0.01	IN L/6846
Dead Load	0.00	in	0.01	in	0.00	in
Total Load	0.03	IN 2L/934	-0.09	IN L/1817	0.01	IN L/7565

Live Load Deflection Criteria: L/240 Total Load Deflection Criteria: L/180

REACTIONS	A	B	C
Live Load	1 lb	3 lb	236 lb
Dead Load	51 lb	105 lb	-12 lb
Total Load	52 lb	108 lb	224 lb
Uplift (1.5 F.S)	**-439 lb**	**-610 lb**	**-43 lb**
Bearing Length	0.02 in	0.04 in	0.08 in

BEAM DATA	Left	Center	Right
Span Length	1 ft	10.5 ft	3.48 ft
Unbraced Length-Top	0 ft	0 ft	0 ft
Unbraced Length-Bottom	1 ft	10.5 ft	3.48 ft
Beam End Elevation Difference		12.25 ft	
Live Load Duration Factor		1.60	
Notch Depth		0.00	

MATERIAL PROPERTIES

2.1E-3100F - APA EWS LVL Stress Classes

	Base Values	Adjusted
Bending Stress:	Fb = 3100 psi	Fb' = 4804 psi
	Cd=1.60 Cl=0.91 CF=1.07	
Shear Stress:	Fv = 285 psi	Fv' = 456 psi
	Cd=1.60	
Modulus of Elasticity:	E = 2100 ksi	E' = 2100 ksi
Comp. ⊥ to Grain:	Fc - ⊥ = 850 psi	Fc - ⊥' = 850 psi

Controlling Moment: -809 ft-lb
3.569 Ft from left support of span 2 (Center Span)
Created by combining all dead loads and live loads on span(s) 2

Controlling Shear: -323 lb
0.774 Ft from left support of span 2 (Center Span)
Created by combining all dead loads and live loads on span(s) 1, 2

Comparisons with required sections:	Req'd	Provided
Section Modulus:	2.02 in3	30.66 in3
Area (Shear):	1.06 in2	25.38 in2
Moment of Inertia (deflection):	31.41 in4	111.15 in4
Moment:	-809 ft-lb	12275 ft-lb
Shear:	-323 lb	7714 lb

NOTES

PFS APPROVED
DATE 3/23/21
PFS CORPORATION
Bloomsburg, PA

LOADING DIAGRAM

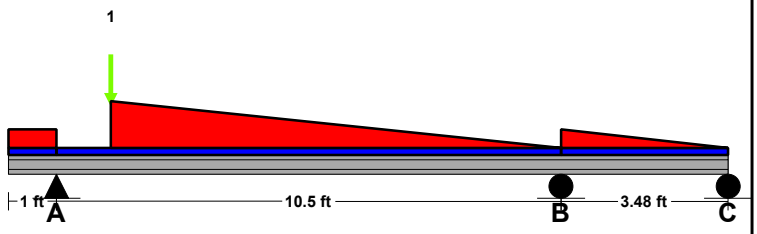

UNIFORM LOADS	Left	Center	Right
Uniform Live Load	0 plf	0 plf	0 plf
Uniform Dead Load	0 plf	0 plf	0 plf
Beam Self Weight	7 plf	7 plf	7 plf
Total Uniform Load	7 plf	7 plf	7 plf

POINT LOADS - CENTER SPAN

Load Number	One
Live Load	-122 lb
Dead Load	0 lb
Location	1.13 ft

TRAPEZOIDAL LOADS - LEFT SPAN

Load Number	One
Left Live Load	-25 plf
Left Dead Load	0 plf
Right Live Load	-26 plf
Right Dead Load	0 plf
Load Start	0 ft
Load End	1 ft
Load Length	1 ft

CENTER SPAN

Load Number	One
Left Live Load	-149 plf
Left Dead Load	0 plf
Right Live Load	0 plf
Right Dead Load	0 plf
Load Start	1.13 ft
Load End	10.5 ft
Load Length	9.37 ft

RIGHT SPAN

Load Number	One
Left Live Load	-57 plf
Left Dead Load	0 plf
Right Live Load	0 plf
Right Dead Load	0 plf
Load Start	0 ft
Load End	3.48 ft
Load Length	3.48 ft

Project: CC-729 Structural Calcs 03-15-2021 DAK

Location: Prow Roof - Heel Beam
Multi-Loaded Multi-Span Beam
[2015 International Building Code(2015 NDS)]
1.75 IN x 7.25 IN x 5.5 FT (4 + 1.5)
2.1E-3100F - APA EWS LVL Stress Classes
Section Adequate By: 127.9%
Controlling Factor: Shear

StruCalc 9.0

Glenco, Inc.
217 East Main Street
Middleburg, PA 17842

page of

StruCalc Version 10.0.1.6 3/17/2021 7:59:34 AM

DEFLECTIONS

	Center		Right	
Live Load	-0.02	IN L/2204	0.06	IN 2L/620
Dead Load	-0.01	in	0.01	in
Total Load	-0.03	IN L/1767	0.07	IN 2L/496

Live Load Deflection Criteria: L/240 Total Load Deflection Criteria: L/180

REACTIONS

	A		B	
Live Load	0	lb	1384	lb
Dead Load	-84	lb	357	lb
Total Load	-84	lb	1741	lb
Uplift (1.5 F.S)	**-442**	**lb**	0	**lb**
Bearing Length	0.00	in	1.17	in

BEAM DATA

	Center		Right	
Span Length	4	ft	1.5	ft
Unbraced Length-Top	0	ft	0	ft
Unbraced Length-Bottom	4	ft	1.5	ft
Live Load Duration Factor	1.15			
Notch Depth	0.00			

MATERIAL PROPERTIES

2.1E-3100F - APA EWS LVL Stress Classes

	Base Values			Adjusted		
Bending Stress:	Fb =	3100	psi	Fb' =	3489	psi
	Cd=1.15 Cl=0.92 CF=1.07					
Shear Stress:	Fv =	285	psi	Fv' =	328	psi
	Cd=1.15					
Modulus of Elasticity:	E =	2100	ksi	E' =	2100	ksi
Comp. ⊥ to Grain:	Fc - ⊥ =	850	psi	Fc - ⊥' =	850	psi

Controlling Moment: -1799 ft-lb
Over right support of span 2 (Center Span)
Created by combining all dead loads and live loads on span(s) 2, 3
Controlling Shear: 1216 lb
At a distance d from left support of span 3 (Right Span)
Created by combining all dead loads and live loads on span(s) 2, 3

Comparisons with required sections:	Req'd		Provided	
Section Modulus:	6.19	in3	15.33	in3
Area (Shear):	5.57	in2	12.69	in2
Moment of Inertia (deflection):	21.51	in4	55.57	in4
Moment:	-1799	ft-lb	4457	ft-lb
Shear:	1216	lb	2772	lb

LOADING DIAGRAM

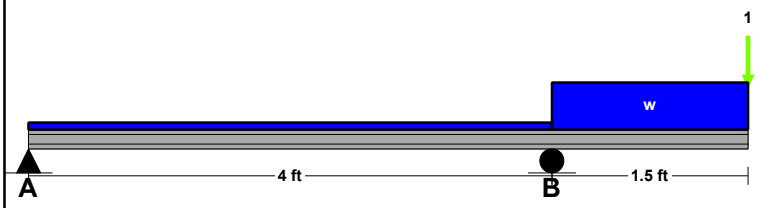

UNIFORM LOADS

	Center		Right	
Uniform Live Load	0	plf	94	plf
Uniform Dead Load	0	plf	16	plf
Beam Self Weight	4	plf	4	plf
Total Uniform Load	4	plf	114	plf

POINT LOADS - RIGHT SPAN

Load Number	One *
Live Load	885 lb
Dead Load	229 lb
Location	1.5 ft

* Load obtained from Load Tracker. See Summary Report for details.

NOTES

PFS APPROVED
DATE 3/23/21
PFS CORPORATION
Bloomsburg, PA

Project: CC-729 Structural Calcs 03-15-2021 DAK

Location: Prow Roof - Heel Beam - Uplift
Multi-Loaded Multi-Span Beam
[2015 International Building Code(2015 NDS)]
1.75 IN x 7.25 IN x 5.5 FT (4 + 1.5)
2.1E-3100F - APA EWS LVL Stress Classes
Section Adequate By: 417.4%
Controlling Factor: Deflection

StruCalc 9.0

Glenco, Inc.
217 East Main Street
Middleburg, PA 17842

StruCalc Version 10.0.1.6 3/17/2021 7:59:34 AM

DEFLECTIONS

	Center		Right	
Live Load	0.01	IN L/4412	-0.03	IN 2L/1242
Dead Load	0.00	in	0.00	in
Total Load	0.01	IN L/4366	-0.03	IN 2L/1240

Live Load Deflection Criteria: L/240 Total Load Deflection Criteria: L/180

REACTIONS

	A	B
Live Load	179 lb	0 lb
Dead Load	6 lb	14 lb
Total Load	185 lb	14 lb
Uplift (1.5 F.S)	0 **lb**	**-685 lb**
Bearing Length	0.12 in	0.01 in

BEAM DATA

	Center	Right
Span Length	4 ft	1.5 ft
Unbraced Length-Top	0 ft	0 ft
Unbraced Length-Bottom	4 ft	1.5 ft
Live Load Duration Factor	1.60	
Notch Depth	0.00	

MATERIAL PROPERTIES

2.1E-3100F - APA EWS LVL Stress Classes

	Base Values	Adjusted
Bending Stress:	Fb = 3100 psi	Fb' = 5282 psi
	Cd=1.60 CF=1.07	
Shear Stress:	Fv = 285 psi	Fv' = 456 psi
	Cd=1.60	
Modulus of Elasticity:	E = 2100 ksi	E' = 2100 ksi
Comp. ⊥ to Grain:	Fc - ⊥ = 850 psi	Fc - ⊥' = 850 psi

Controlling Moment: 712 ft-lb
Over right support of span 2 (Center Span)
Created by combining all dead loads and live loads on span(s) 2, 3
Controlling Shear: -510 lb
At left support of span 3 (Right Span)
Created by combining all dead loads and live loads on span(s) 2, 3

Comparisons with required sections:	Req'd	Provided
Section Modulus:	1.62 in3	15.33 in3
Area (Shear):	1.68 in2	12.69 in2
Moment of Inertia (deflection):	10.74 in4	55.57 in4
Moment:	712 ft-lb	6749 ft-lb
Shear:	-510 lb	3857 lb

LOADING DIAGRAM

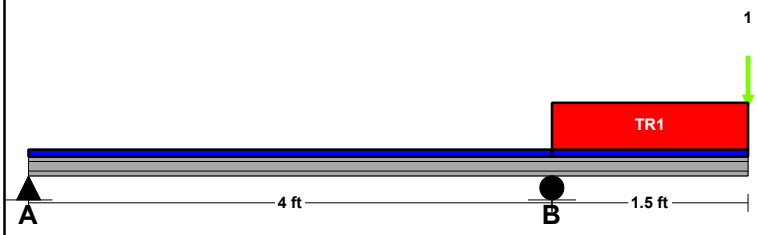

UNIFORM LOADS

	Center	Right
Uniform Live Load	0 plf	0 plf
Uniform Dead Load	0 plf	0 plf
Beam Self Weight	4 plf	4 plf
Total Uniform Load	4 plf	4 plf

POINT LOADS - RIGHT SPAN

Load Number	One
Live Load	-439 lb
Dead Load	0 lb
Location	1.5 ft

TRAPEZOIDAL LOADS - RIGHT SPAN

Load Number	One
Left Live Load	-51 plf
Left Dead Load	0 plf
Right Live Load	-51 plf
Right Dead Load	0 plf
Load Start	0 ft
Load End	1.5 ft
Load Length	1.5 ft

NOTES

PFS APPROVED
DATE 3/23/21
PFS CORPORATION
Bloomsburg, PA

Project: CC-729 Structural Calcs 03-15-2021 DAK

Location: Prow Roof - Ridge Beam
Multi-Loaded Multi-Span Beam
[2015 International Building Code(2015 NDS)]
1.5 IN x 11.25 IN x 14.67 FT (10 + 4.7)
#2 - Spruce-Pine-Fir - Dry Use
Section Adequate By: 14.5%
Controlling Factor: Moment

StruCalc 9.0

Glenco, Inc.
217 East Main Street
Middleburg, PA 17842

StruCalc Version 10.0.1.6 3/17/2021 7:59:34 AM

DEFLECTIONS

	Center		Right	
Live Load	-0.04	IN L/2748	0.14	IN 2L/780
Dead Load	-0.01	in	0.02	in
Total Load	-0.05	IN L/2433	0.17	IN 2L/672

Live Load Deflection Criteria: L/240 Total Load Deflection Criteria: L/180

REACTIONS

	A	B
Live Load	0 lb	516 lb
Dead Load	-3 lb	115 lb
Total Load	-3 lb	631 lb
Uplift (1.5 F.S)	**-102 lb**	**0 lb**
Bearing Length	0.00 in	0.99 in

BEAM DATA

	Center	Right
Span Length	10 ft	4.67 ft
Unbraced Length-Top	2 ft	1.33 ft
Unbraced Length-Bottom	10 ft	4.67 ft
Live Load Duration Factor	1.15	
Notch Depth	0.00	

MATERIAL PROPERTIES

#2 - Spruce-Pine-Fir

	Base Values		Adjusted	
Bending Stress:	Fb = 875 psi		Fb' = 508 psi	
	Cd=1.15 Cl=0.50 CF=1.00			
Shear Stress:	Fv = 135 psi		Fv' = 155 psi	
	Cd=1.15			
Modulus of Elasticity:	E = 1400 ksi		E' = 1400 ksi	
Comp. ⊥ to Grain:	Fc - ⊥ = 425 psi		Fc - ⊥' = 425 psi	

Controlling Moment: -1169 ft-lb
Over right support of span 2 (Center Span)
Created by combining all dead loads and live loads on span(s) 2, 3

Controlling Shear: 396 lb
At a distance d from left support of span 3 (Right Span)
Created by combining all dead loads and live loads on span(s) 2, 3

Comparisons with required sections:	Req'd	Provided
Section Modulus:	27.63 in3	31.64 in3
Area (Shear):	3.83 in2	16.88 in2
Moment of Inertia (deflection):	54.75 in4	177.98 in4
Moment:	-1169 ft-lb	1339 ft-lb
Shear:	396 lb	1747 lb

LOADING DIAGRAM

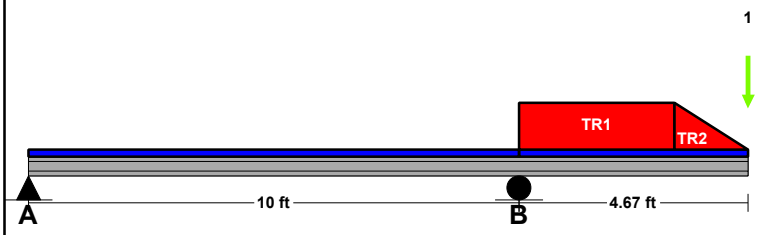

UNIFORM LOADS

	Center	Right
Uniform Live Load	0 plf	0 plf
Uniform Dead Load	0 plf	0 plf
Beam Self Weight	3 plf	3 plf
Total Uniform Load	3 plf	3 plf

POINT LOADS - RIGHT SPAN

Load Number	One
Live Load	57 lb
Dead Load	8 lb
Location	4.67 ft

TRAPEZOIDAL LOADS - RIGHT SPAN

Load Number	One	Two
Left Live Load	92 plf	92 plf
Left Dead Load	15 plf	15 plf
Right Live Load	92 plf	0 plf
Right Dead Load	15 plf	0 plf
Load Start	0 ft	3.17 ft
Load End	3.17 ft	4.67 ft
Load Length	3.17 ft	1.5 ft

NOTES

PFS APPROVED
DATE 3/23/21
PFS CORPORATION
Bloomsburg, PA

Project: CC-729 Structural Calcs 03-15-2021 DAK

Location: Prow Roof - Ridge Beam - Uplift
Multi-Loaded Multi-Span Beam
[2015 International Building Code(2015 NDS)]
1.5 IN x 11.25 IN x 14.67 FT (10 + 4.7)
#2 - Spruce-Pine-Fir - Dry Use
Section Adequate By: 437.0%
Controlling Factor: Deflection

StruCalc 9.0

Glenco, Inc.
217 East Main Street
Middleburg, PA 17842

StruCalc Version 10.0.1.6 3/17/2021 7:59:34 AM

DEFLECTIONS

	Center		Right	
Live Load	0.03	IN L/4575	-0.09	IN 2L/1288
Dead Load	0.00	in	0.00	in
Total Load	0.03	IN L/4372	-0.09	IN 2L/1300

Live Load Deflection Criteria: L/240 Total Load Deflection Criteria: L/180

REACTIONS

	A	B
Live Load	59 lb	0 lb
Dead Load	12 lb	33 lb
Total Load	71 lb	33 lb
Uplift (1.5 F.S)	0 **lb**	**-276 lb**
Bearing Length	0.11 in	0.05 in

BEAM DATA

	Center	Right
Span Length	10 ft	4.67 ft
Unbraced Length-Top	2 ft	1.33 ft
Unbraced Length-Bottom	10 ft	4.67 ft
Live Load Duration Factor	1.60	
Notch Depth	0.00	

MATERIAL PROPERTIES

#2 - Spruce-Pine-Fir

	Base Values		Adjusted	
Bending Stress:	Fb = 875 psi		Fb' = 1324 psi	
	Cd=1.60 Cl=0.95 CF=1.00			
Shear Stress:	Fv = 135 psi		Fv' = 216 psi	
	Cd=1.60			
Modulus of Elasticity:	E = 1400 ksi		E' = 1400 ksi	
Comp. ⊥ to Grain:	Fc - ⊥ = 425 psi		Fc - ⊥' = 425 psi	

Controlling Moment: 556 ft-lb
Over right support of span 2 (Center Span)
Created by combining all dead loads and live loads on span(s) 2, 3
Controlling Shear: -225 lb
At left support of span 3 (Right Span)
Created by combining all dead loads and live loads on span(s) 2, 3

Comparisons with required sections:	Req'd	Provided
Section Modulus:	5.04 in3	31.64 in3
Area (Shear):	1.56 in2	16.88 in2
Moment of Inertia (deflection):	33.14 in4	177.98 in4
Moment:	556 ft-lb	3491 ft-lb
Shear:	-225 lb	2430 lb

LOADING DIAGRAM

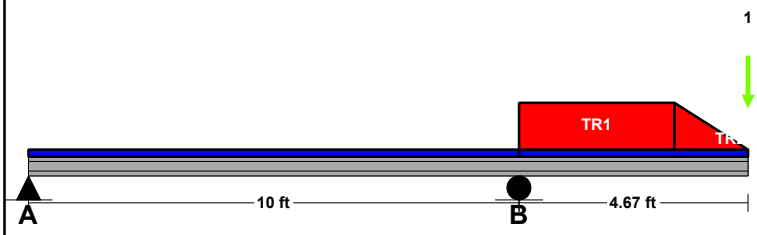

UNIFORM LOADS

	Center	Right
Uniform Live Load	0 plf	0 plf
Uniform Dead Load	0 plf	0 plf
Beam Self Weight	3 plf	3 plf
Total Uniform Load	3 plf	3 plf

POINT LOADS - RIGHT SPAN

Load Number	One
Live Load	-43 lb
Dead Load	0 lb
Location	4.67 ft

TRAPEZOIDAL LOADS - RIGHT SPAN

Load Number	One	Two
Left Live Load	-50 plf	-50 plf
Left Dead Load	0 plf	0 plf
Right Live Load	-50 plf	0 plf
Right Dead Load	0 plf	0 plf
Load Start	0 ft	3.17 ft
Load End	3.17 ft	4.67 ft
Load Length	3.17 ft	1.5 ft

NOTES

PFS APPROVED
DATE 3/23/21
PFS CORPORATION
Bloomsburg, PA

Project: CC-729 Structural Calcs 03-15-2021 DAK

Location: SC1-1 Support column
Column
[2015 International Building Code(2015 NDS)]
(5) 1.5 IN x 3.5 IN x 8.09 FT
#2 - Spruce-Pine-Fir - Dry Use
Section Adequate By: 3.8%

StruCalc 9.0

Glenco, Inc.
217 East Main Street
Middleburg, PA 17842

StruCalc Version 10.0.1.6 3/17/2021 7:59:34 AM

CAUTIONS

* Laminations to be nailed together per National Design Specifications for Wood Construction Section 15.3.3.1

DEFLECTIONS

Deflection due to lateral loads only:	Defl = 0.02	IN = L/5398
Live Load Deflection Criteria:		L/180

VERTICAL REACTIONS

Live Load:	Vert-LL-Rxn =	9492	lb
Dead Load:	Vert-DL-Rxn =	2282	lb
Total Load:	Vert-TL-Rxn =	11774	lb

HORIZONTAL REACTIONS

Total Reaction at Top of Column:	TL-Rxn-Top =	28	lb
Total Reaction at Bottom of Column:	TL-Rxn-Bottom =	28	lb

COLUMN DATA

Total Column Length:	8.09	ft
Unbraced Length (X-Axis) Lx:	8.09	ft
Unbraced Length (Y-Axis) Ly:	4	ft
Column End Condition-K (e):	1	
Axial Load Duration Factor	1.15	
Lateral Load Duration Factor	1.00	

COLUMN PROPERTIES

#2 - Spruce-Pine-Fir

	Base Values	Adjusted
Compressive Stress:	Fc = 1150 psi	Fc' = 497 psi
	Cd=1.15 Cf=1.15 Cp=0.33	
Bending Stress (X-X Axis):	Fbx = 875 psi	Fbx' = 1736 psi
	Cd=1.15 CF=1.50 Cr=1.15 Cl=0.98	
Bending Stress (Y-Y Axis):	Fby = 875 psi	Fby' = 1699 psi
	Cd=1.15 CF=1.50 Cr=1.15	
Modulus of Elasticity:	E = 1400 ksi	E' = 1400 ksi

Column Section (X-X Axis):	dx =	3.5	in
Column Section (Y-Y Axis):	dy =	7.5	in
Area:	A =	26.25	in2
Section Modulus (X-X Axis):	Sx =	15.31	in3
Section Modulus (Y-Y Axis):	Sy =	6.56	in3
Slenderness Ratio:	Lex/dx =	27.74	
	Ley/dy =	6.4	

Column Calculations (Controlling Case Only):

Controlling Load Case: Axial total Load and Lateral loads (D + L + Lateral)

Actual Compressive Stress:	Fc =	449	psi
Allowable Compressive Stress:	Fc' =	497	psi
Eccentricity Moment (X-X Axis):	Mx-ex =	0	ft-lb
Eccentricity Moment (Y-Y Axis):	My-ey =	0	ft-lb
Moment Due to Lateral Loads (X-X Axis):	Mx =	57	ft-lb
Moment Due to Lateral Loads (Y-Y Axis):	My =	0	ft-lb
Bending Stress Lateral Loads Only (X-X Axis):	Fbx =	45	psi
Allowable Bending Stress (X-X Axis):	Fbx' =	1736	psi
Bending Stress Lateral Loads Only (Y-Y Axis):	Fby =	0	psi
Allowable Bending Stress (Y-Y Axis):	Fby' =	1699	psi
Combined Stress Factor:	**CSF =**	**0.96**	

LOADING DIAGRAM

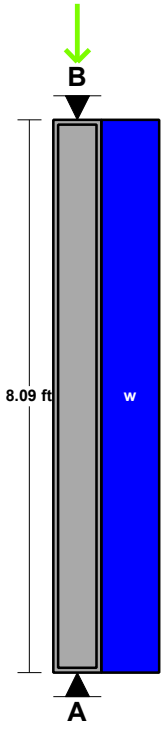

AXIAL LOADING

Live Load:	PL =	9492	lb *
Dead Load:	PD =	2243	lb *
Column Self Weight:	CSW =	39	lb
Total Axial Load:	PT =	11774	lb

* Load obtained from Load Tracker. See Summary Report for details.

LATERAL LOADING (Dy Face)

Uniform Lateral Load:	wL-Lat =	7	plf

PFS APPROVED
DATE 3/23/21
PFS CORPORATION
Bloomsburg, PA

NOTES

Project: CC-729 Structural Calcs 03-15-2021 DAK

Location: SC1-2 Support column
Column
[2015 International Building Code(2015 NDS)]
(5) 1.5 IN x 3.5 IN x 8.09 FT
#2 - Spruce-Pine-Fir - Dry Use
Section Adequate By: 20.5%

StruCalc 9.0

Glenco, Inc.
217 East Main Street
Middleburg, PA 17842

page of

StruCalc Version 10.0.1.6 3/17/2021 7:59:35 AM

CAUTIONS

* Laminations to be nailed together per National Design Specifications for Wood Construction Section 15.3.3.1

DEFLECTIONS

Deflection due to lateral loads only:	Defl =	0.02	IN = L/5398
Live Load Deflection Criteria:			L/180

VERTICAL REACTIONS

Live Load:	Vert-LL-Rxn =	7537	lb
Dead Load:	Vert-DL-Rxn =	2827	lb
Total Load:	Vert-TL-Rxn =	10364	lb

HORIZONTAL REACTIONS

Total Reaction at Top of Column:	TL-Rxn-Top =	28	lb
Total Reaction at Bottom of Column:	TL-Rxn-Bottom =	28	lb

COLUMN DATA

Total Column Length:	8.09	ft
Unbraced Length (X-Axis) Lx:	8.09	ft
Unbraced Length (Y-Axis) Ly:	4	ft
Column End Condition-K (e):	1	
Axial Load Duration Factor	1.15	
Lateral Load Duration Factor	1.00	

COLUMN PROPERTIES

#2 - Spruce-Pine-Fir

	Base Values	Adjusted
Compressive Stress:	Fc = 1150 psi	Fc' = 497 psi
	Cd=1.15 Cf=1.15 Cp=0.33	
Bending Stress (X-X Axis):	Fbx = 875 psi	Fbx' = 1736 psi
	Cd=1.15 CF=1.50 Cr=1.15	
Bending Stress (Y-Y Axis):	Fby = 875 psi	Fby' = 1736 psi
	Cd=1.15 CF=1.50 Cr=1.15	
Modulus of Elasticity:	E = 1400 ksi	E' = 1400 ksi

Column Section (X-X Axis):	dx =	3.5	in
Column Section (Y-Y Axis):	dy =	7.5	in
Area:	A =	26.25	in2
Section Modulus (X-X Axis):	Sx =	15.31	in3
Section Modulus (Y-Y Axis):	Sy =	6.56	in3
Slenderness Ratio:	Lex/dx =	27.74	
	Ley/dy =	6.4	

Column Calculations (Controlling Case Only):

Controlling Load Case: Axial Total Load Only (L + D)

Actual Compressive Stress:	Fc =	395	psi
Allowable Compressive Stress:	Fc' =	497	psi
Eccentricity Moment (X-X Axis):	Mx-ex =	0	ft-lb
Eccentricity Moment (Y-Y Axis):	My-ey =	0	ft-lb
Moment Due to Lateral Loads (X-X Axis):	Mx =	0	ft-lb
Moment Due to Lateral Loads (Y-Y Axis):	My =	0	ft-lb
Bending Stress Lateral Loads Only (X-X Axis):	Fbx =	0	psi
Allowable Bending Stress (X-X Axis):	Fbx' =	1736	psi
Bending Stress Lateral Loads Only (Y-Y Axis):	Fby =	0	psi
Allowable Bending Stress (Y-Y Axis):	Fby' =	1736	psi
Combined Stress Factor:	**CSF =**	**0.79**	

LOADING DIAGRAM

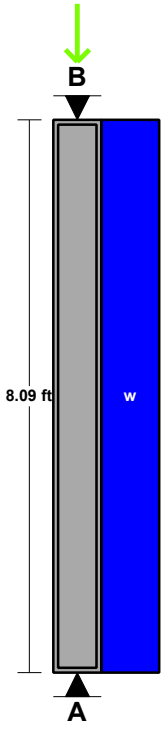

AXIAL LOADING

Live Load:	PL =	7537	lb *
Dead Load:	PD =	2788	lb *
Column Self Weight:	CSW =	39	lb
Total Axial Load:	PT =	10364	lb

* Load obtained from Load Tracker. See Summary Report for details.

LATERAL LOADING (Dy Face)

Uniform Lateral Load:	wL-Lat =	7	plf

PFS APPROVED
DATE 3/23/21
PFS CORPORATION
Bloomsburg, PA

NOTES

Project: CC-729 Structural Calcs 03-15-2021 DAK

Location: Support column - Vault Mid-Span beam - (3) 2x6 SPF#2 Column
[2015 International Building Code(2015 NDS)]
(3) 1.5 IN x 5.5 IN x 8.09 FT
#2 - Spruce-Pine-Fir - Dry Use
Section Adequate By: 34.0%

StruCalc 9.0

Glenco, Inc.
217 East Main Street
Middleburg, PA 17842

page of

StruCalc Version 10.0.1.6 3/17/2021 7:59:35 AM

CAUTIONS

* Laminations to be nailed together per National Design Specifications for Wood Construction Section 15.3.3.1

DEFLECTIONS

Deflection due to lateral loads only:	Defl =	0.01	IN = L/MAX
Live Load Deflection Criteria:			L/180

VERTICAL REACTIONS

Live Load:	Vert-LL-Rxn =	5590	lb
Dead Load:	Vert-DL-Rxn =	1710	lb
Total Load:	Vert-TL-Rxn =	7300	lb

HORIZONTAL REACTIONS

Total Reaction at Top of Column:	TL-Rxn-Top =	28	lb
Total Reaction at Bottom of Column:	TL-Rxn-Bottom =	28	lb

COLUMN DATA

Total Column Length:	8.09	ft
Unbraced Length (X-Axis) Lx:	8.09	ft
Unbraced Length (Y-Axis) Ly:	8.09	ft
Column End Condition-K (e):	1	
Axial Load Duration Factor	1.15	
Lateral Load Duration Factor	1.00	

COLUMN PROPERTIES

#2 - Spruce-Pine-Fir

	Base Values	Adjusted
Compressive Stress:	Fc = 1150 psi	Fc' = 447 psi
	Cd=1.15 Cf=1.10 Cp=0.31	
Bending Stress (X-X Axis):	Fbx = 875 psi	Fbx' = 1504 psi
	Cd=1.15 CF=1.30 Cr=1.15	
Bending Stress (Y-Y Axis):	Fby = 875 psi	Fby' = 1504 psi
	Cd=1.15 CF=1.30 Cr=1.15	
Modulus of Elasticity:	E = 1400 ksi	E' = 1400 ksi

Column Section (X-X Axis):	dx =	5.5	in
Column Section (Y-Y Axis):	dy =	4.5	in
Area:	A =	24.75	in2
Section Modulus (X-X Axis):	Sx =	22.69	in3
Section Modulus (Y-Y Axis):	Sy =	6.19	in3
Slenderness Ratio:	Lex/dx =	17.65	
	Ley/dy =	21.57	

Column Calculations (Controlling Case Only):

Controlling Load Case: Axial Total Load Only (L + D)

Actual Compressive Stress:	Fc =	295	psi
Allowable Compressive Stress:	Fc' =	447	psi
Eccentricity Moment (X-X Axis):	Mx-ex =	0	ft-lb
Eccentricity Moment (Y-Y Axis):	My-ey =	0	ft-lb
Moment Due to Lateral Loads (X-X Axis):	Mx =	0	ft-lb
Moment Due to Lateral Loads (Y-Y Axis):	My =	0	ft-lb
Bending Stress Lateral Loads Only (X-X Axis):	Fbx =	0	psi
Allowable Bending Stress (X-X Axis):	Fbx' =	1504	psi
Bending Stress Lateral Loads Only (Y-Y Axis):	Fby =	0	psi
Allowable Bending Stress (Y-Y Axis):	Fby' =	1504	psi
Combined Stress Factor:	**CSF =**	**0.66**	

LOADING DIAGRAM

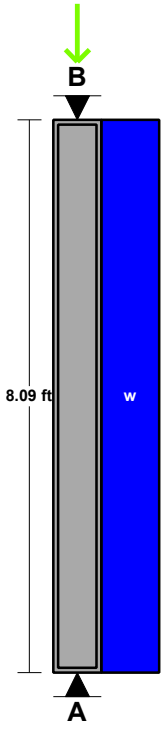

AXIAL LOADING

Live Load:	PL =	5590	lb *
Dead Load:	PD =	1674	lb *
Column Self Weight:	CSW =	36	lb
Total Axial Load:	PT =	7300	lb

* Load obtained from Load Tracker. See Summary Report for details.

LATERAL LOADING (Dy Face)

Uniform Lateral Load:	wL-Lat =	7	plf

PFS APPROVED
DATE 3/23/21
PFS CORPORATION
Bloomsburg, PA

NOTES

Project: CC-729 Structural Calcs 03-15-2021 DAK

Location: Support column - Vault Mid-Span beam - (4) 2x6 SPF#2 Column
[2015 International Building Code(2015 NDS)]
(4) 1.5 IN x 5.5 IN x 7.52 FT
#2 - Spruce-Pine-Fir - Dry Use
Section Adequate By: 58.1%

StruCalc 9.0

Glenco, Inc.
217 East Main Street
Middleburg, PA 17842

StruCalc Version 10.0.1.6 3/17/2021 7:59:35 AM

CAUTIONS

* Laminations to be nailed together per National Design Specifications for Wood Construction Section 15.3.3.1

DEFLECTIONS

Deflection due to lateral loads only: Defl = 0 IN = L/MAX
Live Load Deflection Criteria: L/180

VERTICAL REACTIONS

Live Load:	Vert-LL-Rxn =	6809	lb
Dead Load:	Vert-DL-Rxn =	2445	lb
Total Load:	Vert-TL-Rxn =	9254	lb

HORIZONTAL REACTIONS

Total Reaction at Top of Column:	TL-Rxn-Top =	26	lb
Total Reaction at Bottom of Column:	TL-Rxn-Bottom =	26	lb

COLUMN DATA

Total Column Length:	7.52	ft
Unbraced Length (X-Axis) Lx:	7.52	ft
Unbraced Length (Y-Axis) Ly:	7.52	ft
Column End Condition-K (e):	1	
Axial Load Duration Factor	1.15	
Lateral Load Duration Factor	1.00	

COLUMN PROPERTIES

#2 - Spruce-Pine-Fir

	Base Values	Adjusted
Compressive Stress:	Fc = 1150 psi	Fc' = 670 psi
	Cd=1.15 Cf=1.10 Cp=0.46	
Bending Stress (X-X Axis):	Fbx = 875 psi	Fbx' = 1504 psi
	Cd=1.15 CF=1.30 Cr=1.15	
Bending Stress (Y-Y Axis):	Fby = 875 psi	Fby' = 1504 psi
	Cd=1.15 CF=1.30 Cr=1.15	
Modulus of Elasticity:	E = 1400 ksi	E' = 1400 ksi

Column Section (X-X Axis):	dx =	5.5	in
Column Section (Y-Y Axis):	dy =	6	in
Area:	A =	33	in2
Section Modulus (X-X Axis):	Sx =	30.25	in3
Section Modulus (Y-Y Axis):	Sy =	8.25	in3
Slenderness Ratio:	Lex/dx =	16.41	
	Ley/dy =	15.04	

Column Calculations (Controlling Case Only):

Controlling Load Case: Axial Total Load Only (L + D)

Actual Compressive Stress:	Fc =	280	psi
Allowable Compressive Stress:	Fc' =	670	psi
Eccentricity Moment (X-X Axis):	Mx-ex =	0	ft-lb
Eccentricity Moment (Y-Y Axis):	My-ey =	0	ft-lb
Moment Due to Lateral Loads (X-X Axis):	Mx =	0	ft-lb
Moment Due to Lateral Loads (Y-Y Axis):	My =	0	ft-lb
Bending Stress Lateral Loads Only (X-X Axis):	Fbx =	0	psi
Allowable Bending Stress (X-X Axis):	Fbx' =	1504	psi
Bending Stress Lateral Loads Only (Y-Y Axis):	Fby =	0	psi
Allowable Bending Stress (Y-Y Axis):	Fby' =	1504	psi
Combined Stress Factor:	**CSF =**	**0.42**	

LOADING DIAGRAM

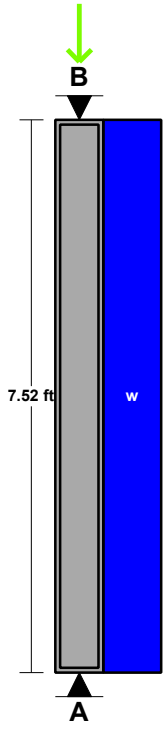

AXIAL LOADING

Live Load:	PL =	6809	lb *
Dead Load:	PD =	2400	lb *
Column Self Weight:	CSW =	45	lb
Total Axial Load:	PT =	9254	lb

* Load obtained from Load Tracker. See Summary Report for details.

LATERAL LOADING (Dy Face)

Uniform Lateral Load: wL-Lat = 7 plf

PFS APPROVED
DATE 3/23/21
PFS CORPORATION
Bloomsburg, PA

NOTES

Project: CC-729 Structural Calcs 03-15-2021 DAK

Location: Vault Endwall Thrust Beam TB1-2
Multi-Loaded Multi-Span Beam
[2015 International Building Code(2015 NDS)]
(3) 1.75 IN x 5.5 IN x 14.0 FT
2.0 Rigidlam LVL - Roseburg Forest Products
Section Adequate By: 27.8%
Controlling Factor: Deflection

StruCalc 9.0

Glenco, Inc.
217 East Main Street
Middleburg, PA 17842

StruCalc Version 10.0.1.6 3/17/2021 7:59:35 AM

DEFLECTIONS

	Center	
Live Load	0.69	IN L/244
Dead Load	0.04	in
Total Load	0.73	IN L/230

Live Load Deflection Criteria: L/180 Total Load Deflection Criteria: L/180

REACTIONS

	A	B
Live Load	763 lb	889 lb
Dead Load	51 lb	51 lb
Total Load	814 lb	940 lb
Bearing Length	0.21 in	0.24 in

BEAM DATA

	Center
Span Length	14 ft
Unbraced Length-Top	0 ft
Unbraced Length-Bottom	14 ft
Live Load Duration Factor	1.60
Notch Depth	0.00

MATERIAL PROPERTIES

2.0 Rigidlam LVL - Roseburg Forest Products

	Base Values	Adjusted
Bending Stress:	Fb = 3100 psi	Fb' = 5468 psi
	Cd=1.60 CF=1.10	
Shear Stress:	Fv = 290 psi	Fv' = 464 psi
	Cd=1.60	
Modulus of Elasticity:	E = 2000 ksi	E' = 2000 ksi
Comp. ⊥ to Grain:	Fc - ⊥ = 750 psi	Fc - ⊥' = 750 psi

Controlling Moment: 3011 ft-lb
7.28 Ft from left support of span 2 (Center Span)
Created by combining all dead loads and live loads on span(s) 2
Controlling Shear: -873 lb
At a distance d from right support of span 2 (Center Span)
Created by combining all dead loads and live loads on span(s) 2

Comparisons with required sections:	Req'd	Provided
Section Modulus:	6.61 in3	26.47 in3
Area (Shear):	2.82 in2	28.88 in2
Moment of Inertia (deflection):	56.93 in4	72.79 in4
Moment:	3011 ft-lb	12061 ft-lb
Shear:	-873 lb	8932 lb

LOADING DIAGRAM

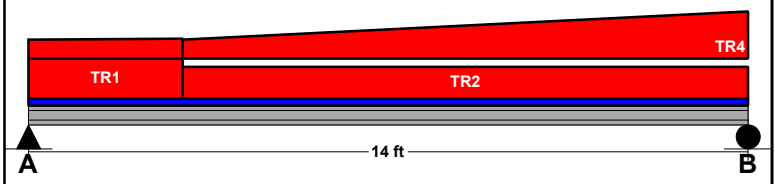

UNIFORM LOADS

	Center
Uniform Live Load	0 plf
Uniform Dead Load	0 plf
Beam Self Weight	7 plf
Total Uniform Load	7 plf

TRAPEZOIDAL LOADS - CENTER SPAN

Load Number	One	Two	Three	Four
Left Live Load	77 plf	61 plf	18 plf	31 plf
Left Dead Load	0 plf	0 plf	0 plf	0 plf
Right Live Load	77 plf	61 plf	38 plf	90 plf
Right Dead Load	0 plf	0 plf	0 plf	0 plf
Load Start	0 ft	3 ft	0 ft	3 ft
Load End	3 ft	14 ft	3 ft	14 ft
Load Length	3 ft	11 ft	3 ft	11 ft

NOTES

PFS APPROVED
DATE 3/23/21
PFS CORPORATION
Bloomsburg, PA

Project: CC-729 Structural Calcs 03-15-2021 DAK

Location: Vault Mid-Span beam Spans ABCD- Snow
Multi-Loaded Multi-Span Beam
[2015 International Building Code(2015 NDS)]
(2) 1.75 IN x 18.0 IN x 52.0 FT (23.5 + 13.4 + 15.1)
2.1E-3100F - APA EWS LVL Stress Classes
Section Adequate By: 100.7%
Controlling Factor: Moment

StruCalc 9.0

Glenco, Inc.
217 East Main Street
Middleburg, PA 17842

StruCalc Version 10.0.1.6 3/17/2021 7:59:36 AM

CAUTIONS

* Laminations are to be fully connected to provide uniform transfer of loads to all members

DEFLECTIONS	Left		Center		Right	
Live Load	0.45	IN L/630	-0.10	IN L/1618	0.11	IN L/1607
Dead Load	0.16	in	-0.02	in	0.03	in
Total Load	0.60	IN L/467	-0.12	IN L/1331	0.15	IN L/1233

Live Load Deflection Criteria: L/240 Total Load Deflection Criteria: L/180

REACTIONS	A	B	C	D
Live Load	3656 lb	9108 lb	6670 lb	2815 lb
Dead Load	1355 lb	3250 lb	1844 lb	986 lb
Total Load	5011 lb	12358 lb	8514 lb	3801 lb
Uplift (1.5 F.S)	0 **lb**	0 **lb**	**-594 lb**	0 **lb**
Bearing Length	1.68 in	4.15 in	2.86 in	1.28 in

BEAM DATA	Left	Center	Right
Span Length	23.52 ft	13.42 ft	15.06 ft
Unbraced Length-Top	2 ft	2 ft	2 ft
Unbraced Length-Bottom	2 ft	2 ft	2 ft
Live Load Duration Factor	1.15		
Notch Depth	0.00		

LOADING DIAGRAM

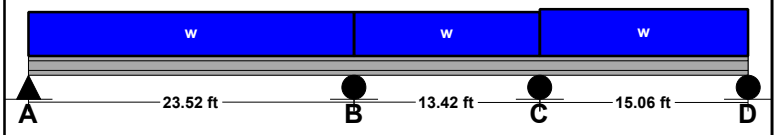

UNIFORM LOADS	Left	Center	Right
Uniform Live Load	368 plf	368 plf	393 plf
Uniform Dead Load	122 plf	122 plf	131 plf
Beam Self Weight	18 plf	18 plf	18 plf
Total Uniform Load	508 plf	508 plf	542 plf

MATERIAL PROPERTIES

2.1E-3100F - APA EWS LVL Stress Classes

	Base Values	Adjusted
Bending Stress:	Fb = 3100 psi	Fb' = 3349 psi
	Cd=1.15 Cl=0.99 CF=0.95	
Shear Stress:	Fv = 285 psi	Fv' = 328 psi
	Cd=1.15	
Modulus of Elasticity:	E = 2100 ksi	E' = 2100 ksi
Comp. ⊥ to Grain:	Fc - ⊥ = 850 psi	Fc - ⊥' = 850 psi

Controlling Moment: -26279 ft-lb
23.52 Ft from left support of span 1 (Left Span)
Created by combining all dead loads and live loads on span(s) 1, 2
Controlling Shear: -6378 lb
At a distance d from the right support of span 1 (Left Span)
Created by combining all dead loads and live loads on span(s) 1, 2

Comparisons with required sections:	Req'd	Provided
Section Modulus:	94.15 in3	189 in3
Area (Shear):	29.19 in2	63 in2
Moment of Inertia (deflection):	655.31 in4	1701 in4
Moment:	-26279 ft-lb	52754 ft-lb
Shear:	-6378 lb	13766 lb

NOTES

PFS APPROVED
DATE 3/23/21
PFS CORPORATION
Bloomsburg, PA

Project: CC-729 Structural Calcs 03-15-2021 DAK

Location: Vault Mid-Span beam Spans ABCD- Uplift
Multi-Loaded Multi-Span Beam
[2015 International Building Code(2015 NDS)]
(2) 1.75 IN x 18.0 IN x 52.0 FT (23.5 + 13.4 + 15.1)
2.1E-3100F - APA EWS LVL Stress Classes
Section Adequate By: 377.6%
Controlling Factor: Deflection

StruCalc 9.0
Glenco, Inc.
217 East Main Street
Middleburg, PA 17842

StruCalc Version 10.0.1.6 3/17/2021 7:59:36 AM

CAUTIONS

* Laminations are to be fully connected to provide uniform transfer of loads to all members

DEFLECTIONS	Left		Center		Right	
Live Load	-0.25	IN L/1146	0.05	IN L/3084	-0.05	IN L/3450
Dead Load	0.02	in	0.00	in	0.00	in
Total Load	-0.23	IN L/1249	0.05	IN L/3256	-0.05	IN L/3750

Live Load Deflection Criteria: L/240 Total Load Deflection Criteria: L/180

REACTIONS	A	B	C	D
Live Load	57 lb	258 lb	1011 lb	123 lb
Dead Load	177 lb	427 lb	230 lb	121 lb
Total Load	234 lb	685 lb	1241 lb	244 lb
Uplift (1.5 F.S)	**-1903 lb**	**-4764 lb**	**-3088 lb**	**-1182 lb**
Bearing Length	0.08 in	0.23 in	0.42 in	0.08 in

BEAM DATA	Left	Center	Right
Span Length	23.52 ft	13.42 ft	15.06 ft
Unbraced Length-Top	2 ft	2 ft	2 ft
Unbraced Length-Bottom	2 ft	2 ft	2 ft
Live Load Duration Factor	1.60		
Notch Depth	0.00		

MATERIAL PROPERTIES

2.1E-3100F - APA EWS LVL Stress Classes

	Base Values		Adjusted	
Bending Stress:	Fb = 3100 psi		Fb' = 4632 psi	
	Cd=1.60 Cl=0.98 CF=0.95			
Shear Stress:	Fv = 285 psi		Fv' = 456 psi	
	Cd=1.60			
Modulus of Elasticity:	E = 2100 ksi		E' = 2100 ksi	
Comp. ⊥ to Grain:	Fc - ⊥ = 850 psi		Fc - ⊥' = 850 psi	

Controlling Moment: 9803 ft-lb
23.52 Ft from left support of span 1 (Left Span)
Created by combining all dead loads and live loads on span(s) 1, 2
Controlling Shear: 2600 lb
24.0 Ft from left support of span 1 (Left Span)
Created by combining all dead loads and live loads on span(s) 1, 2

Comparisons with required sections:	Req'd	Provided
Section Modulus:	25.39 in3	189 in3
Area (Shear):	8.55 in2	63 in2
Moment of Inertia (deflection):	356.19 in4	1701 in4
Moment:	9803 ft-lb	72957 ft-lb
Shear:	2600 lb	19152 lb

LOADING DIAGRAM

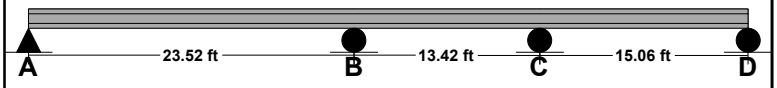

UNIFORM LOADS	Left		Center		Right	
Uniform Live Load	-204	plf	-204	plf	-172	plf
Uniform Dead Load	0	plf	0	plf	0	plf
Beam Self Weight	18	plf	18	plf	18	plf
Total Uniform Load	-186	plf	-186	plf	-154	plf

NOTES

PFS APPROVED
DATE 3/23/21
PFS CORPORATION
Bloomsburg, PA

Project: CC-729 Structural Calcs 03-15-2021 DAK

Location: Vault Mid-Span beam Spans Cantilever BCD- Snow
Multi-Loaded Multi-Span Beam
[2015 International Building Code(2015 NDS)]
(2) 1.75 IN x 18.0 IN x 32.23 FT (13.4 + 15.1 + 3.8)
2.1E-3100F - APA EWS LVL Stress Classes
Section Adequate By: 236.4%
Controlling Factor: Shear

StruCalc 9.0
Glenco, Inc.
217 East Main Street
Middleburg, PA 17842

StruCalc Version 10.0.1.6 3/17/2021 7:59:36 AM

CAUTIONS
* Laminations are to be fully connected to provide uniform transfer of loads to all members

DEFLECTIONS	Left		Center		Right	
Live Load	0.06	IN L/2533	0.09	IN L/2070	0.08	IN 2L/1068
Dead Load	0.01	in	0.01	in	0.00	in
Total Load	0.07	IN L/2153	0.10	IN L/1791	0.08	IN 2L/1108

Live Load Deflection Criteria: L/240 Total Load Deflection Criteria: L/180

REACTIONS	A	B	C
Live Load	2310 lb	6809 lb	5590 lb
Dead Load	701 lb	2400 lb	1674 lb
Total Load	3011 lb	9209 lb	7264 lb
Bearing Length	1.01 in	3.10 in	2.44 in

BEAM DATA	Left	Center	Right
Span Length	13.42 ft	15.06 ft	3.75 ft
Unbraced Length-Top	2 ft	2 ft	1.33 ft
Unbraced Length-Bottom	2 ft	2 ft	1.33 ft
Live Load Duration Factor	1.15		
Notch Depth	0.00		

MATERIAL PROPERTIES
2.1E-3100F - APA EWS LVL Stress Classes

	Base Values		Adjusted	
Bending Stress:	Fb = 3100 psi		Fb' = 3349 psi	
	Cd=1.15 Cl=0.99 CF=0.95			
Shear Stress:	Fv = 285 psi		Fv' = 328 psi	
	Cd=1.15			
Modulus of Elasticity:	E = 2100 ksi		E' = 2100 ksi	
Comp. ⊥ to Grain:	Fc - ⊥ = 850 psi		Fc - ⊥' = 850 psi	

Controlling Moment: -13034 ft-lb
13.42 Ft from left support of span 1 (Left Span)
Created by combining all dead loads and live loads on span(s) 1, 2
Controlling Shear: 4092 lb
At a distance d from left support of span 2 (Center Span)
Created by combining all dead loads and live loads on span(s) 1, 2

Comparisons with required sections:	Req'd	Provided
Section Modulus:	46.7 in3	189 in3
Area (Shear):	18.73 in2	63 in2
Moment of Inertia (deflection):	382.5 in4	1701 in4
Moment:	-13034 ft-lb	52754 ft-lb
Shear:	4092 lb	13766 lb

LOADING DIAGRAM

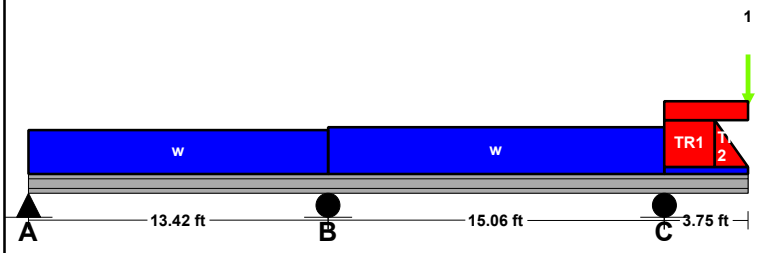

UNIFORM LOADS	Left	Center	Right
Uniform Live Load	368 plf	393 plf	0 plf
Uniform Dead Load	122 plf	131 plf	0 plf
Beam Self Weight	18 plf	18 plf	18 plf
Total Uniform Load	508 plf	542 plf	18 plf

POINT LOADS - RIGHT SPAN

Load Number	One *
Live Load	1252 lb
Dead Load	371 lb
Location	3.75 ft

* Load obtained from Load Tracker. See Summary Report for details.

TRAPEZOIDAL LOADS - RIGHT SPAN

Load Number	One	Two	Three
Left Live Load	273 plf	273 plf	104 plf
Left Dead Load	46 plf	46 plf	17 plf
Right Live Load	273 plf	0 plf	104 plf
Right Dead Load	46 plf	0 plf	17 plf
Load Start	0 ft	2.25 ft	0 ft
Load End	2.25 ft	3.75 ft	3.75 ft
Load Length	2.25 ft	1.5 ft	3.75 ft

NOTES

PFS APPROVED
DATE 3/23/21
PFS CORPORATION
Bloomsburg, PA

Project: CC-729 Structural Calcs 03-15-2021 DAK

Location: Vault Mid-Span beam Spans Cantilever BCD- Uplift
Multi-Loaded Multi-Span Beam
[2015 International Building Code(2015 NDS)]
(2) 1.75 IN x 18.0 IN x 32.23 FT (13.4 + 15.1 + 3.8)
2.1E-3100F - APA EWS LVL Stress Classes
Section Adequate By: 773.6%
Controlling Factor: Deflection

StruCalc 9.0

Glenco, Inc.
217 East Main Street
Middleburg, PA 17842

StruCalc Version 10.0.1.6 3/17/2021 7:59:36 AM

CAUTIONS

* Laminations are to be fully connected to provide uniform transfer of loads to all members

DEFLECTIONS	Left		Center		Right	
Live Load	-0.03	IN L/4641	-0.04	IN L/4757	-0.04	IN 2L/2096
Dead Load	0.00	in	0.00	in	0.00	in
Total Load	-0.03	IN L/4835	-0.04	IN L/5036	-0.04	IN 2L/2032

Live Load Deflection Criteria: L/240 Total Load Deflection Criteria: L/180

REACTIONS	A	B	C
Live Load	191 lb	345 lb	144 lb
Dead Load	91 lb	315 lb	187 lb
Total Load	282 lb	660 lb	331 lb
Uplift (1.5 F.S)	**-1213 lb**	**-3113 lb**	**-2516 lb**
Bearing Length	0.09 in	0.22 in	0.11 in

BEAM DATA	Left	Center	Right
Span Length	13.42 ft	15.06 ft	3.75 ft
Unbraced Length-Top	2 ft	2 ft	1.33 ft
Unbraced Length-Bottom	2 ft	2 ft	1.33 ft
Live Load Duration Factor	1.60		
Notch Depth	0.00		

MATERIAL PROPERTIES

2.1E-3100F - APA EWS LVL Stress Classes

	Base Values		Adjusted	
Bending Stress:	Fb = 3100 psi		Fb' = 4632 psi	
	Cd=1.60 Cl=0.98 CF=0.95			
Shear Stress:	Fv = 285 psi		Fv' = 456 psi	
	Cd=1.60			
Modulus of Elasticity:	E = 2100 ksi		E' = 2100 ksi	
Comp. ⊥ to Grain:	Fc - ⊥ = 850 psi		Fc - ⊥' = 850 psi	

Controlling Moment: 4291 ft-lb
13.42 Ft from left support of span 1 (Left Span)
Created by combining all dead loads and live loads on span(s) 1, 2

Controlling Shear: 1565 lb
13.0 Ft from left support of span 1 (Left Span)
Created by combining all dead loads and live loads on span(s) 1, 2

Comparisons with required sections:	Req'd	Provided
Section Modulus:	11.12 in3	189 in3
Area (Shear):	5.15 in2	63 in2
Moment of Inertia (deflection):	194.7 in4	1701 in4
Moment:	4291 ft-lb	72957 ft-lb
Shear:	1565 lb	19152 lb

LOADING DIAGRAM

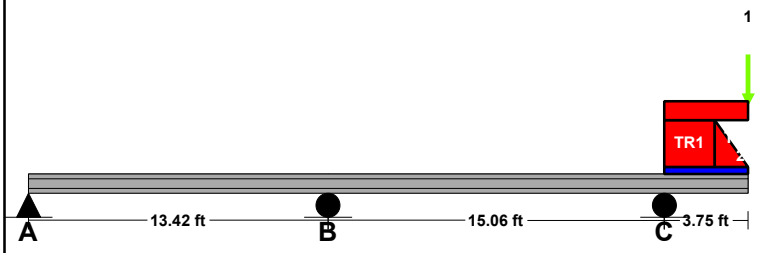

UNIFORM LOADS	Left	Center	Right
Uniform Live Load	-204 plf	-171 plf	0 plf
Uniform Dead Load	0 plf	0 plf	0 plf
Beam Self Weight	18 plf	18 plf	18 plf
Total Uniform Load	-186 plf	-153 plf	18 plf

POINT LOADS - RIGHT SPAN

Load Number	One
Live Load	-610 lb
Dead Load	0 lb
Location	3.75 ft

TRAPEZOIDAL LOADS - RIGHT SPAN

Load Number	One	Two	Three
Left Live Load	-149 plf	-149 plf	-50 plf
Left Dead Load	0 plf	0 plf	0 plf
Right Live Load	-149 plf	0 plf	-50 plf
Right Dead Load	0 plf	0 plf	0 plf
Load Start	0 ft	2.25 ft	0 ft
Load End	2.25 ft	3.75 ft	3.75 ft
Load Length	2.25 ft	1.5 ft	3.75 ft

NOTES

PFS APPROVED
DATE 3/23/21
PFS CORPORATION
Bloomsburg, PA

Project: CC-729 Structural Calcs 03-15-2021 DAK

Location: Vault Sidewall Thrust Beam TB1-1
Multi-Loaded Multi-Span Beam
[2015 International Building Code(2015 NDS)]
1.75 IN x 16.0 IN x 14.83 FT
2.1E-3100F - APA EWS LVL Stress Classes
Section Adequate By: 255.2%
Controlling Factor: Moment

StruCalc 9.0

Glenco, Inc.
217 East Main Street
Middleburg, PA 17842

StruCalc Version 10.0.1.6 3/17/2021 7:59:36 AM

DEFLECTIONS Center

Live Load	0.18	IN L/972
Dead Load	0.01	in
Total Load	0.19	IN L/936

Live Load Deflection Criteria: L/240 Total Load Deflection Criteria: L/180

REACTIONS A B

	A		B	
Live Load	1565	lb	1565	lb
Dead Load	61	lb	61	lb
Total Load	1626	lb	1626	lb
Bearing Length	1.09	in	1.09	in

BEAM DATA Center

Span Length	14.83	ft
Unbraced Length-Top	0	ft
Unbraced Length-Bottom	14.83	ft
Live Load Duration Factor	1.15	
Notch Depth	0.00	

MATERIAL PROPERTIES

2.1E-3100F - APA EWS LVL Stress Classes

	Base Values		Adjusted	
Bending Stress:	Fb = 3100	psi	Fb' = 3439	psi
	Cd=1.15 CF=0.96			
Shear Stress:	Fv = 285	psi	Fv' = 328	psi
	Cd=1.15			
Modulus of Elasticity:	E = 2100	ksi	E' = 2100	ksi
Comp. ⊥ to Grain:	Fc - ⊥ = 850	psi	Fc - ⊥' = 850	psi

Controlling Moment: 6025 ft-lb
7.41 Ft from left support of span 2 (Center Span)
Created by combining all dead loads and live loads on span(s) 2
Controlling Shear: -1365 lb
At a distance d from right support of span 2 (Center Span)
Created by combining all dead loads and live loads on span(s) 2

Comparisons with required sections:	Req'd		Provided	
Section Modulus:	21.02	in3	74.67	in3
Area (Shear):	6.25	in2	28	in2
Moment of Inertia (deflection):	147.45	in4	597.33	in4
Moment:	6025	ft-lb	21399	ft-lb
Shear:	-1365	lb	6118	lb

LOADING DIAGRAM

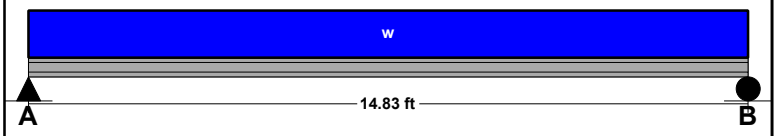

UNIFORM LOADS Center

Uniform Live Load	211	plf
Uniform Dead Load	0	plf
Beam Self Weight	8	plf
Total Uniform Load	219	plf

NOTES

PFS APPROVED
DATE 3/23/21
PFS CORPORATION
Bloomsburg, PA

Project: CC-729 Structural Calcs 03-15-2021 DAK

Location: Vertical Heel Beam HB1-1 - Snow
Multi-Loaded Multi-Span Beam
[2015 International Building Code(2015 NDS)]
(2) 1.75 IN x 11.25 IN x 14.83 FT
2.1E-3100F - APA EWS LVL Stress Classes
Section Adequate By: 1439.1%
Controlling Factor: Deflection

StruCalc 9.0

Glenco, Inc.
217 East Main Street
Middleburg, PA 17842

StruCalc Version 10.0.1.6 3/17/2021 7:59:37 AM

CAUTIONS

* Laminations are to be fully connected to provide uniform transfer of loads to all members

DEFLECTIONS	Center	
Live Load	0.04	IN L/4754
Dead Load	0.03	in
Total Load	0.06	IN L/2770

Live Load Deflection Criteria: L/240 Total Load Deflection Criteria: L/180

REACTIONS	A		B	
Live Load	222	lb	222	lb
Dead Load	159	lb	159	lb
Total Load	381	lb	381	lb
Bearing Length	0.13	in	0.13	in

BEAM DATA	Center	
Span Length	14.83	ft
Unbraced Length-Top	2	ft
Unbraced Length-Bottom	2	ft
Live Load Duration Factor	1.15	
Notch Depth	0.00	

LOADING DIAGRAM

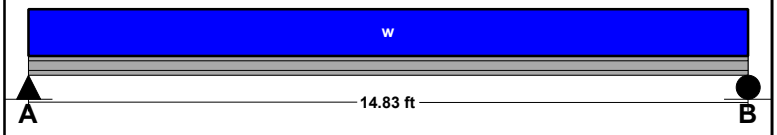

UNIFORM LOADS	Center	
Uniform Live Load	30	plf
Uniform Dead Load	10	plf
Beam Self Weight	11	plf
Total Uniform Load	51	plf

MATERIAL PROPERTIES

2.1E-3100F - APA EWS LVL Stress Classes

	Base Values			Adjusted	
Bending Stress:	Fb =	3100 psi	Fb' =	3568	psi
	Cd=1.15 Cl=0.99 CF=1.01				
Shear Stress:	Fv =	285 psi	Fv' =	328	psi
	Cd=1.15				
Modulus of Elasticity:	E =	2100 ksi	E' =	2100	ksi
Comp. ⊥ to Grain:	Fc - ⊥ =	850 psi	Fc - ⊥' =	850	psi

Controlling Moment: 1415 ft-lb
7.41 Ft from left support of span 2 (Center Span)
Created by combining all dead loads and live loads on span(s) 2
Controlling Shear: 336 lb
At a distance d from left support of span 2 (Center Span)
Created by combining all dead loads and live loads on span(s) 2

Comparisons with required sections:	Req'd	Provided
Section Modulus:	4.76 in3	73.83 in3
Area (Shear):	1.54 in2	39.38 in2
Moment of Inertia (deflection):	26.98 in4	415.28 in4
Moment:	1415 ft-lb	21952 ft-lb
Shear:	336 lb	8603 lb

NOTES

PFS APPROVED
DATE 3/23/21
PFS CORPORATION
Bloomsburg, PA

Project: CC-729 Structural Calcs 03-15-2021 DAK

Location: Vertical Heel Beam HB1-1 - Uplift
Multi-Loaded Multi-Span Beam
[2015 International Building Code(2015 NDS)]
(2) 1.75 IN x 11.25 IN x 14.83 FT
2.1E-3100F - APA EWS LVL Stress Classes
Section Adequate By: 195.7%
Controlling Factor: Deflection

StruCalc 9.0

Glenco, Inc.
217 East Main Street
Middleburg, PA 17842

StruCalc Version 10.0.1.6 3/17/2021 7:59:37 AM

CAUTIONS

* Laminations are to be fully connected to provide uniform transfer of loads to all members

DEFLECTIONS Center

Live Load	-0.25	IN L/710
Dead Load	0.01	in
Total Load	-0.24	IN L/753

Live Load Deflection Criteria: L/240 Total Load Deflection Criteria: L/180

REACTIONS

	A		B	
Live Load	-1490	lb	-1490	lb
Dead Load	85	lb	85	lb
Total Load	-1405	lb	-1405	lb
Uplift (1.5 F.S)	**-1434**	**lb**	**-1434**	**lb**
Bearing Length	0.03	in	0.03	in

BEAM DATA Center

Span Length	14.83	ft
Unbraced Length-Top	2	ft
Unbraced Length-Bottom	2	ft
Live Load Duration Factor	1.60	
Notch Depth	0.00	

LOADING DIAGRAM

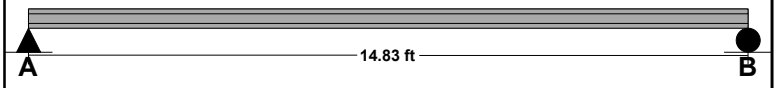

UNIFORM LOADS Center

Uniform Live Load	-201	plf
Uniform Dead Load	0	plf
Beam Self Weight	11	plf
Total Uniform Load	-190	plf

MATERIAL PROPERTIES

2.1E-3100F - APA EWS LVL Stress Classes

	Base Values		Adjusted	
Bending Stress:	Fb = 3100	psi	Fb' = 4947	psi
	Cd=1.60 Cl=0.99 CF=1.01			
Shear Stress:	Fv = 285	psi	Fv' = 456	psi
	Cd=1.60			
Modulus of Elasticity:	E = 2100	ksi	E' = 2100	ksi
Comp. ⊥ to Grain:	Fc - ⊥ = 850	psi	Fc - ⊥' = 850	psi

Controlling Moment: -5210 ft-lb
7.41 Ft from left support of span 2 (Center Span)
Created by combining all dead loads and live loads on span(s) 2

Controlling Shear: 1405 lb
15.0 Ft from left support of span 2 (Center Span)
Created by combining all dead loads and live loads on span(s) 2

Comparisons with required sections:	Req'd	Provided
Section Modulus:	12.64 in3	73.83 in3
Area (Shear):	4.62 in2	39.38 in2
Moment of Inertia (deflection):	140.46 in4	415.28 in4
Moment:	-5210 ft-lb	30439 ft-lb
Shear:	1405 lb	11970 lb

NOTES

PFS APPROVED
DATE 3/23/21
PFS CORPORATION
Bloomsburg, PA

Project: CC-729 Structural Calcs 03-15-2021 DAK

Location: Wind Column
Column
[2015 International Building Code(2015 NDS)]
3.5 IN x 7.25 IN x 19.86 FT
2.0 Rigidlam LVL - Roseburg Forest Products
Section Adequate By: 16.2%

StruCalc 9.0
Glenco, Inc.
217 East Main Street
Middleburg, PA 17842

StruCalc Version 10.0.1.6 3/17/2021 7:59:37 AM

DEFLECTIONS

Deflection due to lateral loads only:	Defl = 1.14	IN = L/209
Live Load Deflection Criteria:		L/180

VERTICAL REACTIONS

Live Load:	Vert-LL-Rxn =	516	lb
Dead Load:	Vert-DL-Rxn =	241	lb
Total Load:	Vert-TL-Rxn =	757	lb

HORIZONTAL REACTIONS

Total Reaction at Top of Column:	TL-Rxn-Top =	383	lb
Total Reaction at Bottom of Column:	TL-Rxn-Bottom =	557	lb

COLUMN DATA

Total Column Length:	19.86	ft
Unbraced Length (X-Axis) Lx:	19.86	ft
Unbraced Length (Y-Axis) Ly:	11.77	ft
Column End Condition-K (e):	1	
Axial Load Duration Factor	1.15	
Lateral Load Duration Factor	1.60	

COLUMN PROPERTIES

2.0 Rigidlam LVL - Roseburg Forest Products

	Base Values	Adjusted
Compressive Stress:	Fc = 3000 psi	Fc' = 507 psi
	Cd=1.60 Cp=0.11	
Bending Stress (X-X Axis):	Fbx = 3100 psi	Fbx' = 4888 psi
	Cd=1.60 CF=1.07 Cl=0.93	
Bending Stress (Y-Y Axis):	Fby = 3100 psi	Fby' = 5282 psi
	Cd=1.60 CF=1.07	
Modulus of Elasticity:	E = 2000 ksi	E' = 2000 ksi

Column Section (X-X Axis):	dx =	7.25	in
Column Section (Y-Y Axis):	dy =	3.5	in
Area:	A =	25.38	in2
Section Modulus (X-X Axis):	Sx =	30.66	in3
Section Modulus (Y-Y Axis):	Sy =	14.8	in3
Slenderness Ratio:	Lex/dx =	32.87	
	Ley/dy =	40.35	

Column Calculations (Controlling Case Only):

Controlling Load Case: Axial total Load and Lateral loads (D + L + Lateral)

Actual Compressive Stress:	Fc =	30	psi
Allowable Compressive Stress:	Fc' =	507	psi
Eccentricity Moment (X-X Axis):	Mx-ex =	0	ft-lb
Eccentricity Moment (Y-Y Axis):	My-ey =	0	ft-lb
Moment Due to Lateral Loads (X-X Axis):	Mx =	4487	ft-lb
Moment Due to Lateral Loads (Y-Y Axis):	My =	0	ft-lb
Bending Stress Lateral Loads Only (X-X Axis):	Fbx =	1756	psi
Allowable Bending Stress (X-X Axis):	Fbx' =	4888	psi
Bending Stress Lateral Loads Only (Y-Y Axis):	Fby =	0	psi
Allowable Bending Stress (Y-Y Axis):	Fby' =	5282	psi
Combined Stress Factor:	**CSF =**	**0.38**	

LOADING DIAGRAM

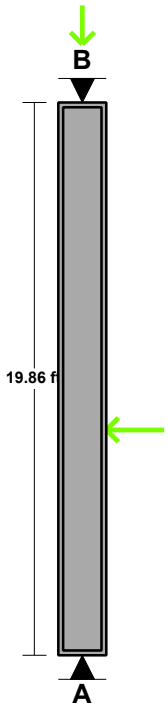

AXIAL LOADING

Live Load:	PL =	516	lb *
Dead Load:	PD =	115	lb *
Column Self Weight:	CSW =	126	lb
Total Axial Load:	PT =	757	lb

* Load obtained from Load Tracker. See Summary Report for details.

LATERAL LOADING (Dy Face)

Uniform Lateral Load:	wL-Lat =	0 plf
Point Load:		One
Live Load:		940 lb
Location:		11.8 ft

NOTES

PFS APPROVED
DATE 3/23/21
PFS CORPORATION
Bloomsburg, PA